PUSH-PULL SOLENOIDS

Selection Process for Push-Pull Solenoid

1. Metric (M prefix) and SAE (F prefix) screw thread options are available.
2. The solenoid size is determined based on required force, displacement, and duty cycle from force-stroke characteristic graphs in the solenoid datasheets. Note that this may also be influenced by available power and speed requirements, for a given force requirement a larger solenoid will develop the required force with lower power input, however the higher moving mass may make this slower in operation than a smaller device
3. The pole piece form is also selected from the characteristic graphs, some sizes are available with either flat or conical polepiece design as standard options (note that intermediate or other force characteristic may be possible with polepiece geometry customisation)
4. The coil requirements are determined from tables of coil gauge / duty cycle for the chosen size of device. Coil rating is specified as AWG size of the coil wire
5. The life expectancy of the solenoid is specified by the suffix, P is standard life (2M-5M cycles), PE is extended (5M-10M cycles). For the small push-pull solenoids a different bearing construction is used with special heat-treatment of the bore for nominal >5M cycles. Life expectance if very much application specific, it will be reduced by long stroke, excessive side loading, particulate contamination and corrosive or otherwise aggressive environments. But may be increased by short stroke, low side loading and clean operating conditions. With the right environment and application setting it is possible to achieve Life expectancy of +50Million cycles. As life expectance is application specific it needs to be verified under real operating conditions in the customer application to ensure this is sufficient for purpose.

Size Determination

Device size is determined for the required force, displacement, and duty cycle from the tables below, more detailed force data is shown graphically in the datasheet for each solenoid. These charts show force at maximum useful stroke (the stroke at which force falls to 10% of the holding force at 0mm position) for 100% or 10% duty excitation.

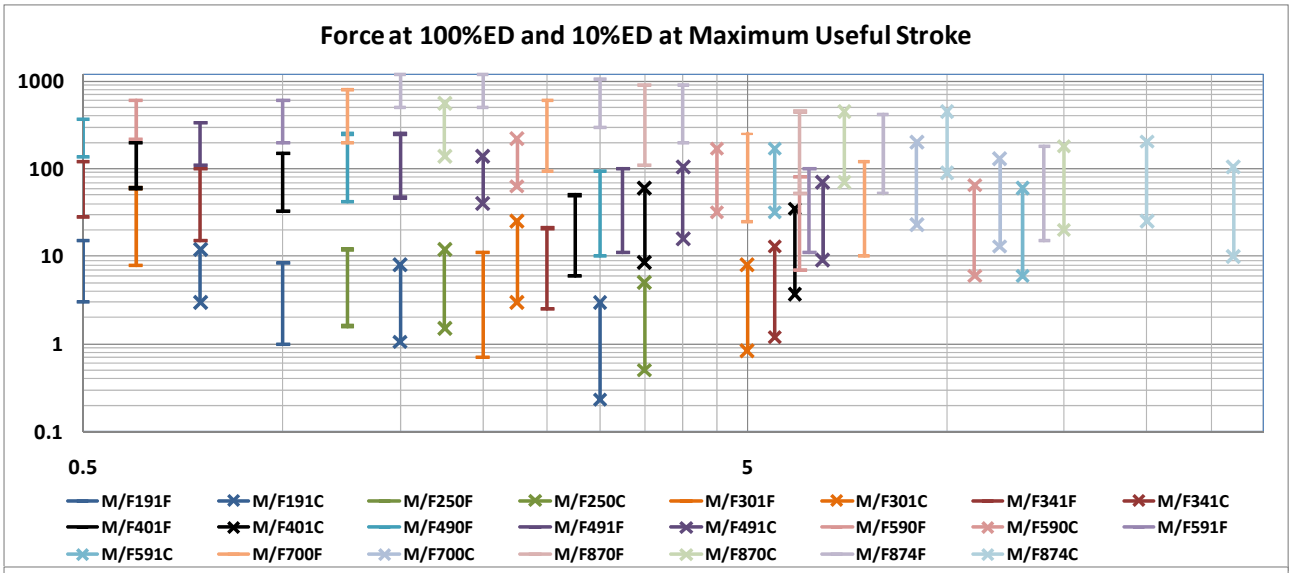

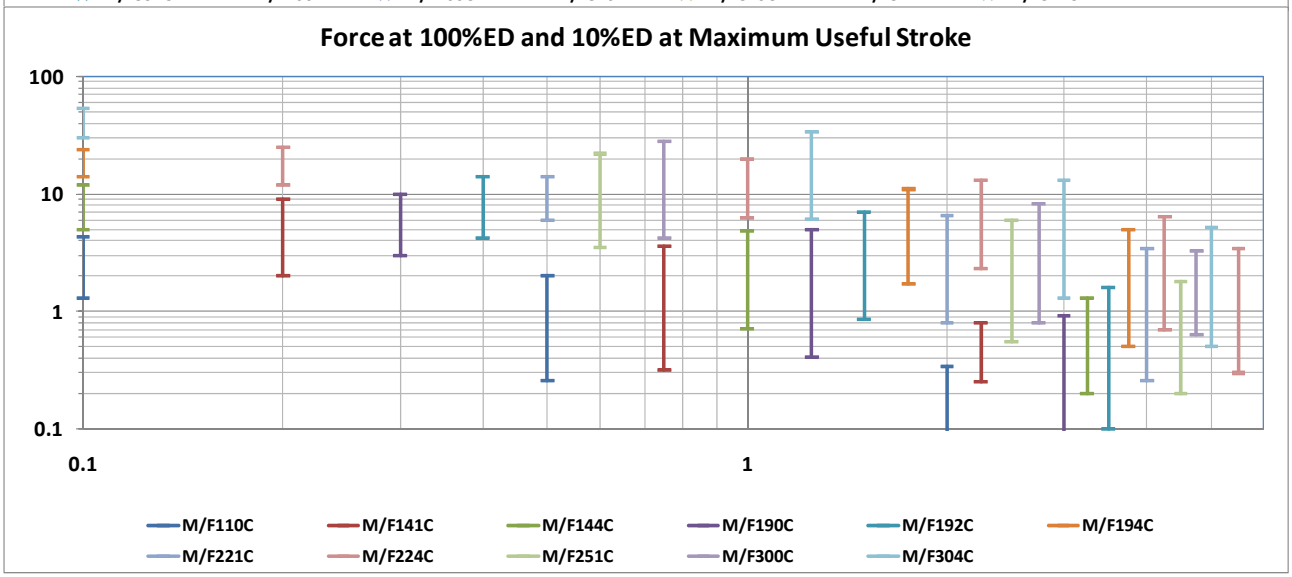

Specifying Coil AWG

Duty Cycle			100%	50%	25%	10%
Maximum 'ON' time			∞	100	36	7
Watts at 20º C			7	14	28	70
ampere-turns at 20º C			425	602	849	1350
AWG no	Resistance	no. turns	Nominal Voltage			
26	1.96	231	3.5	5	7.1	11
27	3.16	296	4.5	6.3	8.9	14
28	5.1	378	5.6	8	11	18
29	6.94	423	7.1	10	14	22
30	11	530	8.9	13	18	28
31	16.9	649	11	16	22	36
32	28.3	858	14	20	28	45

- The coil AWG is determined from tables of coil data for the given part, in the column corresponding to chosen duty cycle, the voltage closest to user supply is picked, and coil AWG corresponding to this is indicated in the LH column (example shows selection for a part operated from 12v supply at 25% duty cycle)
    - In the example illustrated, the selection of a device having higher nominal voltage than the supply is conservative, for maximum torque and speed the 28AWG coil might be more appropriate (see also point below)
    - Allowance should be made for voltage drops in switching devices, and resistive drops in wiring harness when determining the nominal voltage which will be applied to the solenoid.

Customisation of the Push-Pull Solenoid

Most of the attachment components of the push-pull solenoid are produced by machining and are amenable to modification even in small (100's or less) quantity. Some typical examples are illustrated below.

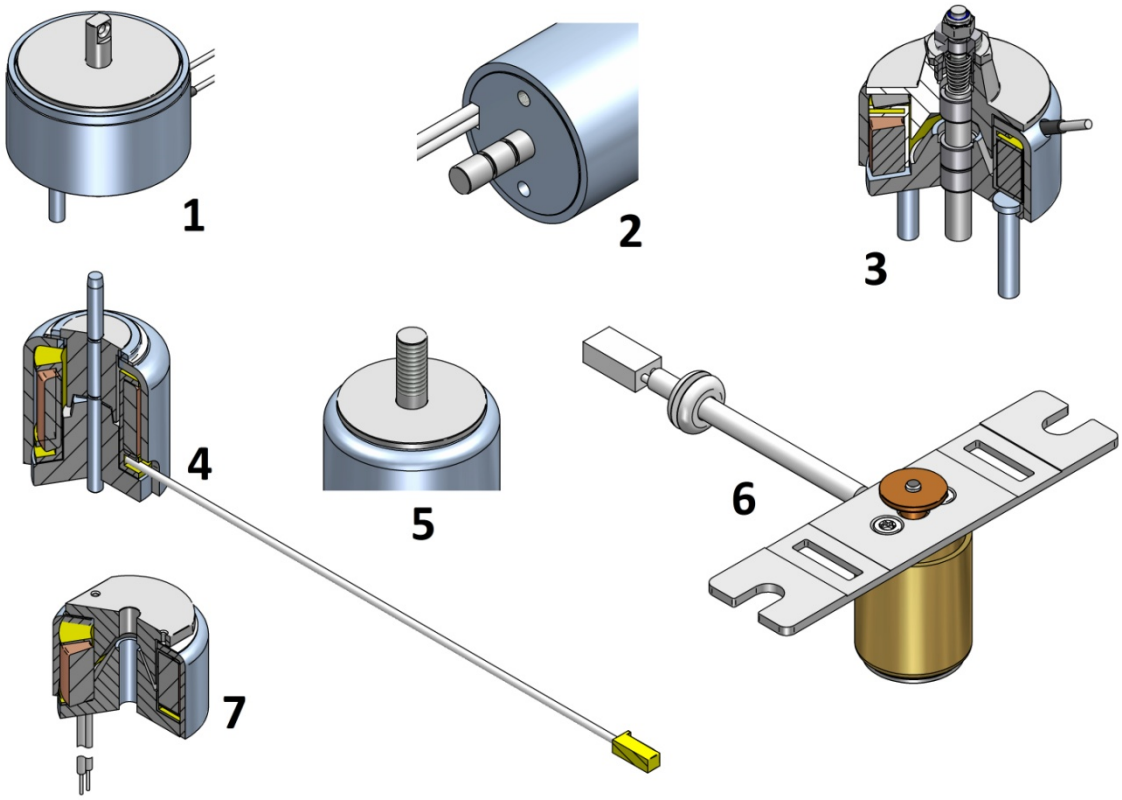

1. Flats and cross-hole machined in shaft at armature side
2. Grooves machined in shaft at base side
3. Shaft decoupled from plunger by spring, maintenance-free bearings
4. Modified plunger with shallow angle for increased force at extended position, shaft hardened with sphere end on base side tapered on armature side, and lead wire assembly with connector
5. Screw threads machined on shaft on armature side
6. Mounting plate, bronze bush pressed on shaft, custom lead assembly
7. Modified armature with flat sides and threaded holes, no shaft

Mechanical modifications are best described with a sketch or drawing, when defining dimensions along the axis these are normally defined relative to the base plane of the solenoid, and described with reference to major components as described below.

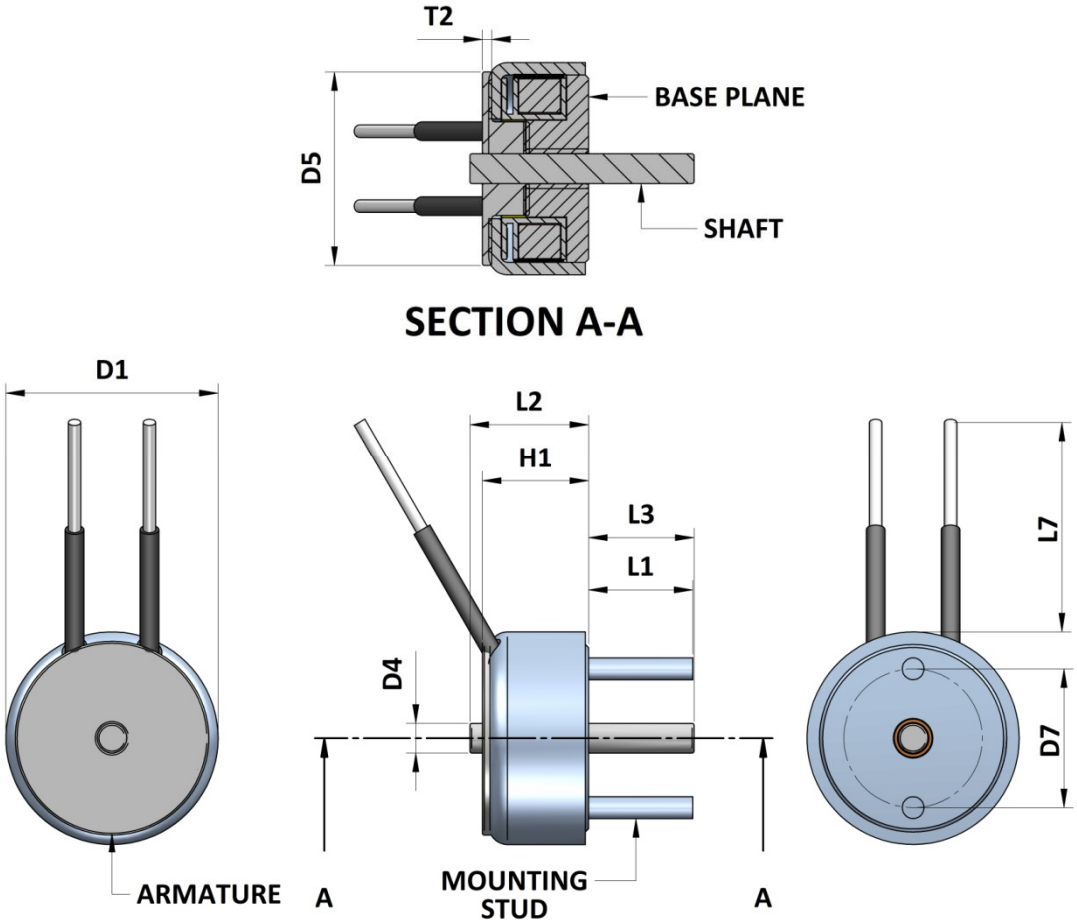

GEEPLUS Push Pull Solenoid size 110

Device drawn in energised condition
conical plunger
Life Expectancy (cycles): >5M

Available mechanical options:
M: metric thread
F: SAE thread

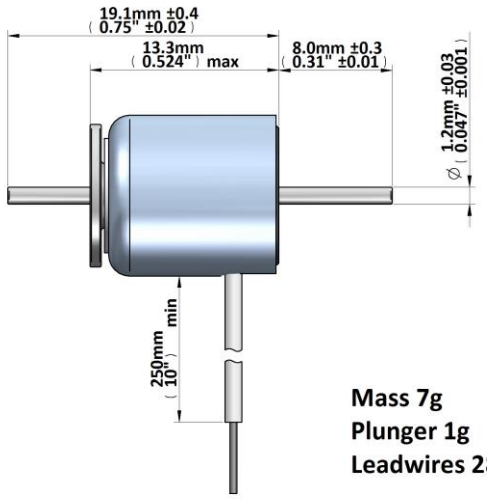

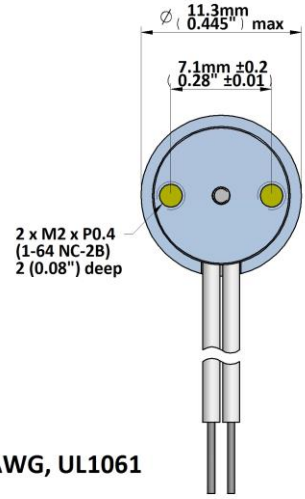

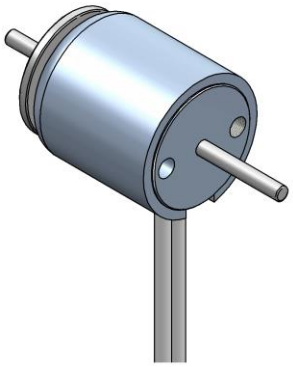

Mass 7g
Plunger 1g
Leadwires 28AWG, UL1061

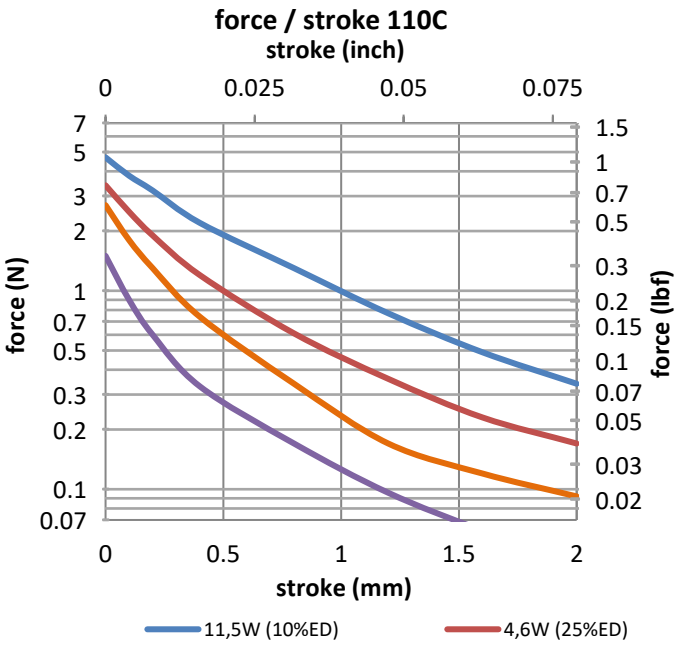

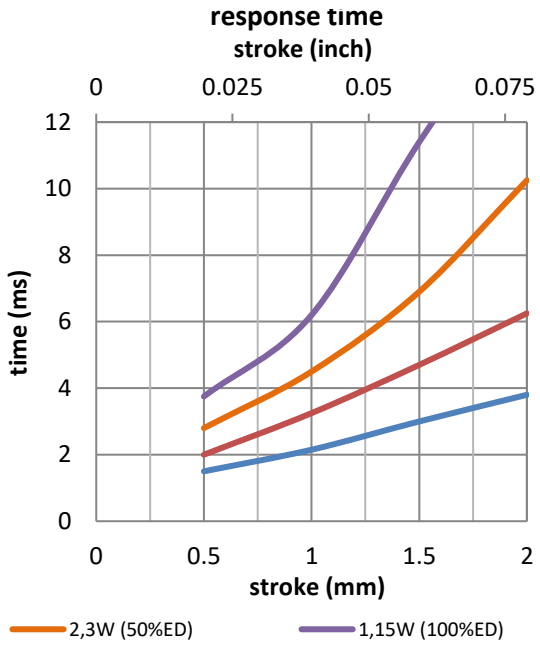

Data at 20°C , without heatsink

duty cycle = "on" time / ("on" time + "off" time) x 100%			100% cont.	50% or less	25% or less	10% or less
Max. "on" time in seconds			∞	100	36	7
watts at 20°C			1.15	2.3	4.6	11.5
ampere-turns at 20°			105	148	210	332
type no.	**resistance Ω±10% (at 20°C)**	**number of turns**	**volts DC**			
M110C-3V F110C-3V	10.5	390	3.0	4.2	6.0	9.5
M110C-6V F110C-6V	31.5	700	6.0	8.5	12	19
M110C-12V F110C-12V	143.0	1450	12	17	24	38

Insulation Resistance >100MΩ, 500VDC Megger
Class A (105°C) insulation class

Dielectric Strength 1000VAC, 50/60Hz, 1 minute

GEEPLUS Push Pull Solenoid size 141

Device drawn in energised condition
conical plunger
Life Expectancy (cycles): >5M

Available mechanical options:
M: metric thread
F: SAE thread

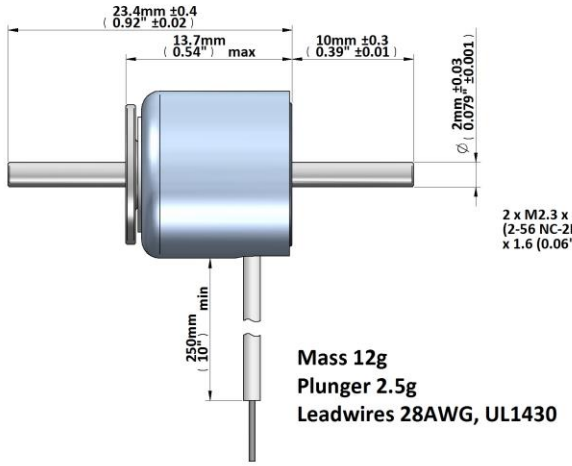

Mass 12g
Plunger 2.5g
Leadwires 28AWG, UL1430

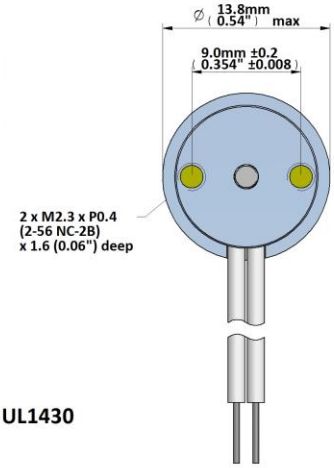

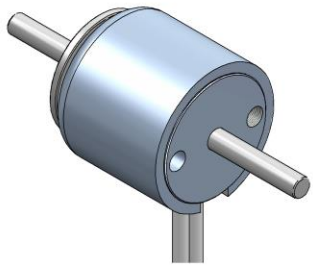

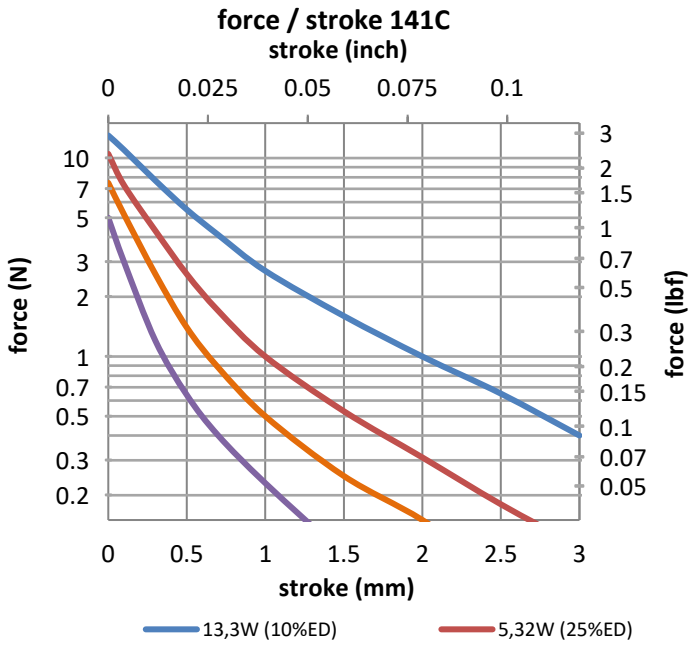

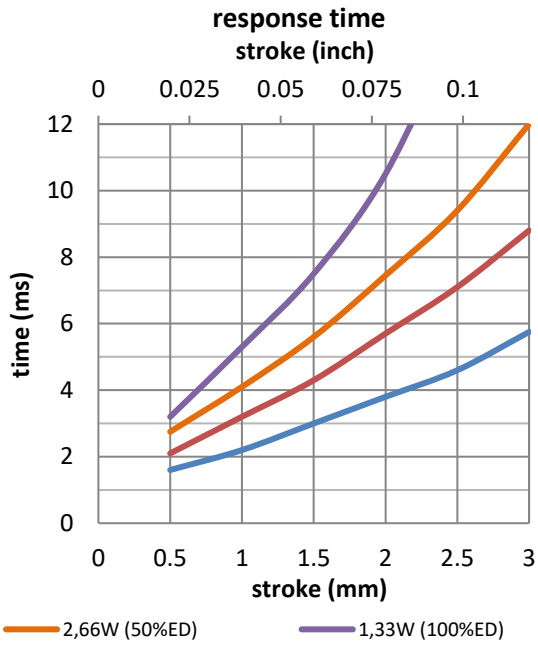

Data at 20°C , without heatsink

duty cycle = "on" time / ("on" time + "off" time) x 100%			100% cont.	50% or less	25% or less	10% or less
Max. "on" time in seconds			∞	100	36	7
watts at 20°C			1.33	2.66	5.32	13.3
ampere-turns at 20°			133	189	267	422
type no.	**resistance Ω±10% (at 20°C)**	**number of turns**	**volts DC**			
M141C-3V F141C-3V	6.5	330	3.0	4.2	6.0	9.5
M141C-6V F141C-6V	30	700	6.0	8.5	12	19
M141C-12V F141C-12V	97	1200	12	17	24	38
M141C-24V F141C-24V	468	2600	24	34	48	76

Insulation Resistance >100MΩ, 500VDC Megger
Dielectric Strength 1000VAC, 50/60Hz, 1 minute
Class E (120°C) insulation class

GEEPLUS Push Pull Solenoid size 144

Device drawn in energised condition
conical plunger
Life Expectancy (cycles): >5M

Available mechanical options:
M: metric thread
F: SAE thread

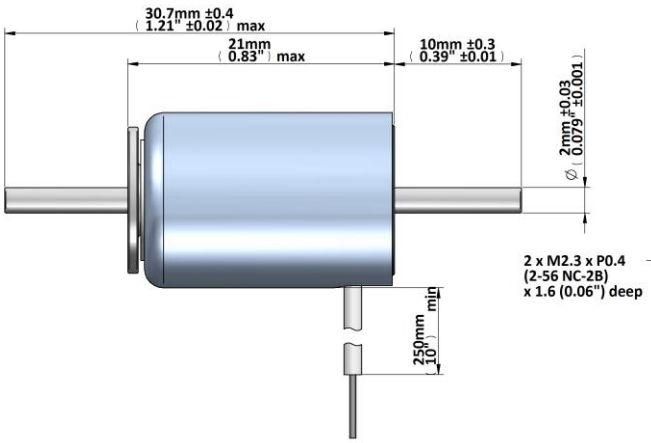

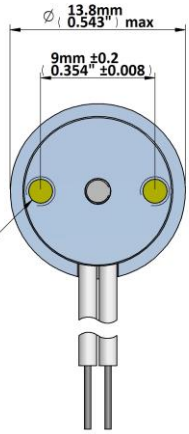

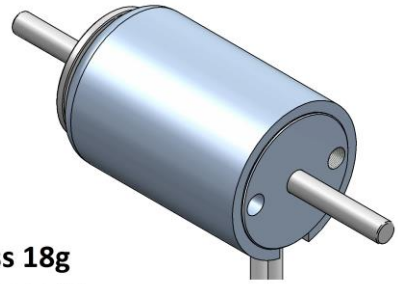

Mass 18g
Plunger 3g
Leadwires 28AWG, UL1430

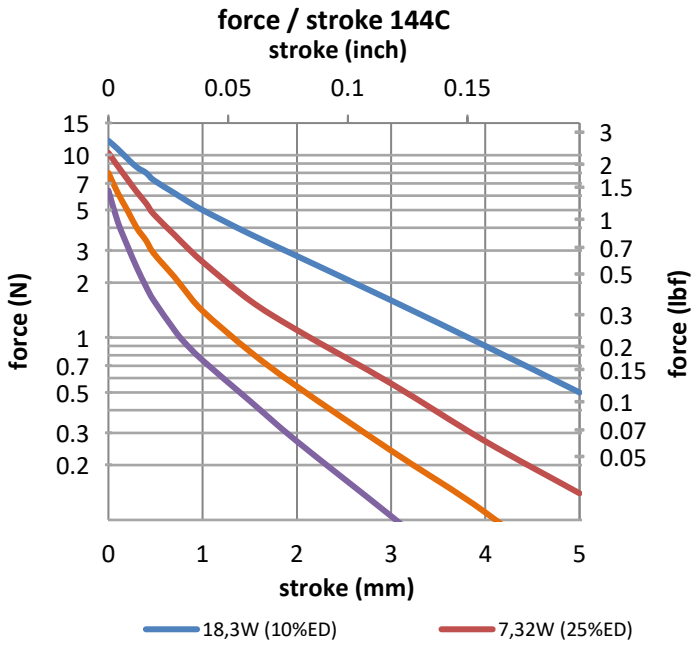

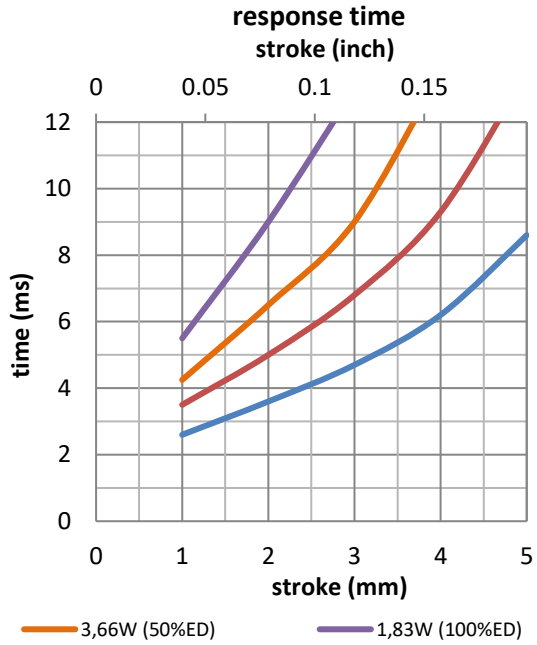

Data at 20°C , without heatsink

duty cycle = "on" time / ("on" time + "off" time) x 100%			100% cont.	50% or less	25% or less	10% or less
Max. "on" time in seconds			∞	100	36	7
watts at 20°C			1.83	3.66	7.32	18.3
ampere-turns at 20°			236	334	472	746
type no.	**resistance Ω±10% (at 20°C)**	**number of turns**	**volts DC**			
M144C-3V F144C-3V	5.0	415	3.0	4.2	6.0	9.5
M144C-6V F144C-6V	22.7	910	6.0	8.5	12	19
M144C-12V F144C-12V	91.5	1750	12	17	24	38
M144C-24V F144C-24V	329	3150	24	34	48	76

Insulation Resistance >100MΩ, 500VDC Megger
Dielectric Strength 1000VAC, 50/60Hz, 1 minute
Class E (120°C) insulation class

GEEPLUS Push Pull Solenoid size 190

Device drawn in energised condition
conical plunger
Life Expectancy (cycles): >5M

Available mechanical options:
M: metric thread
F: SAE thread

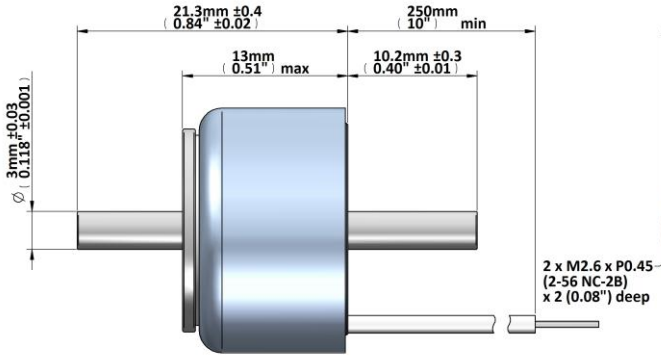

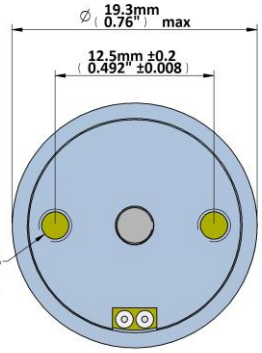

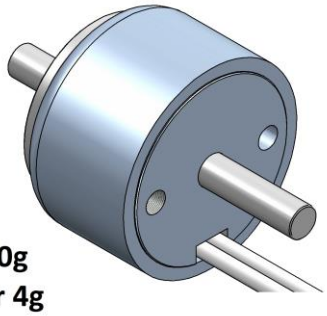

Mass 20g
Plunger 4g
Leadwires 28AWG, UL1430

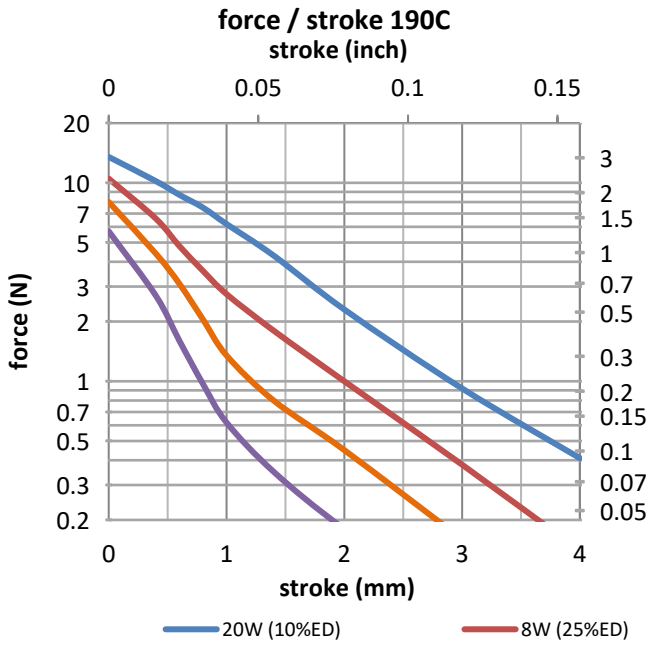

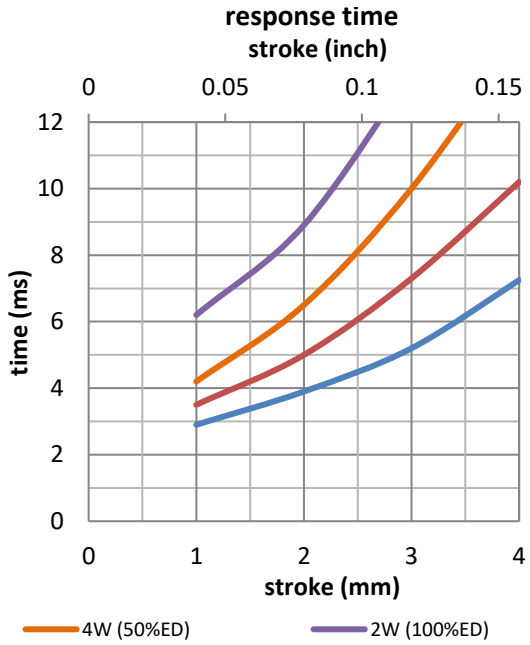

Data at 20°C , without heatsink

duty cycle = "on" time / "on" time + "off" time x 100%			100% cont.	50% or less	25% or less	10% or less
Max. "on" time in seconds			∞	100	36	7
watts at 20°C			2	4	8	20
ampere-turns at 20°			170	240	340	537
type no.	**resistance Ω±10% (at 20°C)**	**number of turns**	**volts DC**			
M190C-3V F190C-3V	4.9	295	3.0	4.2	6.0	9.5
M190C-6V F190C-6V	21.5	620	6.0	8.5	12	19
M190C-12V F190C-12V	89	1230	12	17	24	38
M190C-24V F190C-24V	307	2120	24	34	48	76

Insulation Resistance >100MΩ, 500VDC Megger
Dielectric Strength 1000VAC, 50/60Hz, 1 minute
Class E (120°C) insulation class

GEEPLUS Push Pull Solenoid size 191

Device drawn in energised condition
plunger options: conical (191C) / flat (191F)
Life Expectancy (cycles): >2M (-P) >10M(-PE)

Available mechanical options:
M: metric thread
F: SAE thread

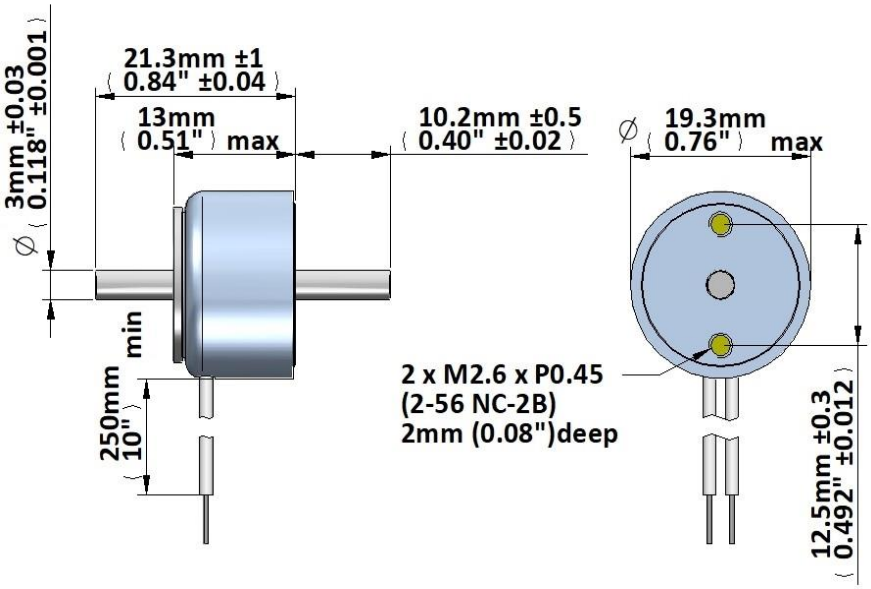

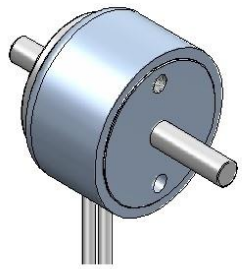

Mass 22g
Plunger (C) , (F) 4g
Leadwires 28AWG, UL1430

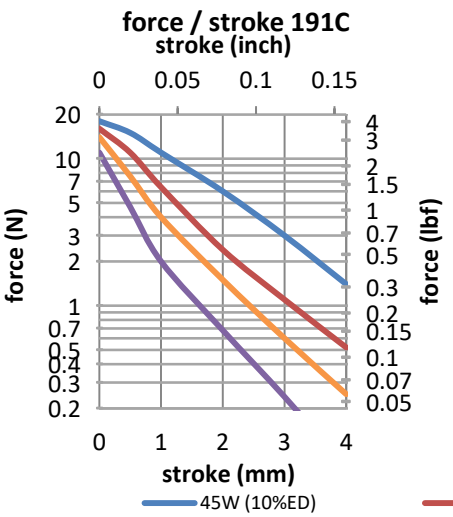

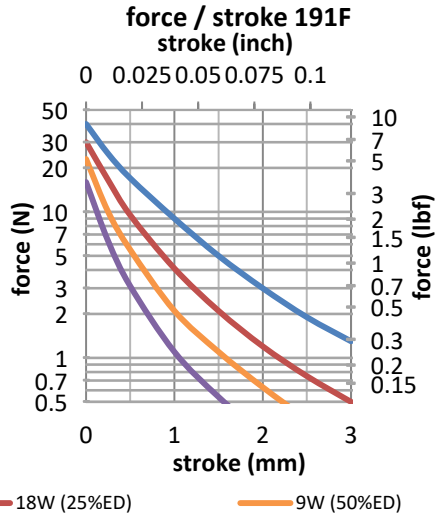

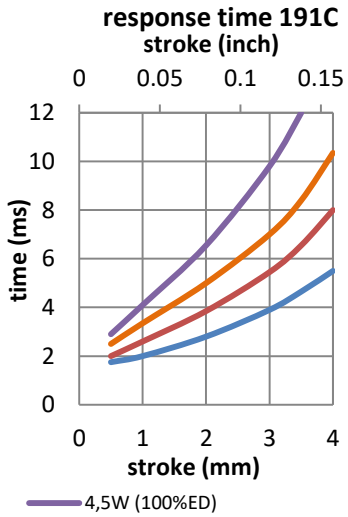

45W (10%ED) 18W (25%ED) 9W (50%ED) 4,5W (100%ED)

Data at 20°C , device connected to heatsink 50x50x3mm aluminum

duty cycle = "on" time / ("on" time + "off" time) x 100%			100% cont.	50% or less	25% or less	10% or less
Max. "on" time in seconds			∞	100	36	7
watts at 20°C			4.5	9	18	45
ampere-turns at 20°			285	403	570	901
AWG no.	resistance Ω±10% (at 20°C)	number of turns	volts DC			
30	4.0	288	4.1	5.7	8.0	12.1
31	5.6	324	5.0	7.1	9.9	15.8
32	9.1	544	6.3	8.9	12.4	19.7
33	15.0	684	8.0	11.3	15.7	25
34	24.1	840	10.2	14.4	20	32
35	37.1	1056	12.8	18.1	25	40
36	58.5	1109	16.1	23	32	50
37	75.7	1370	19.8	28	39	62
38	118	1761	25	35	49	78
39	199	2283	33	46	64	103
40	328	4200	42	59	82	131

Insulation Resistance >100MΩ, 500VDC Megger

Dielectric Strength 1000VAC, 50/60Hz, 1 minute

Class E (120°C) insulation class

GEEPLUS Push Pull Solenoid size 192

Device drawn in energised condition
conical plunger
Life Expectancy (cycles): >5M

Available mechanical options:
M: metric thread
F: SAE thread

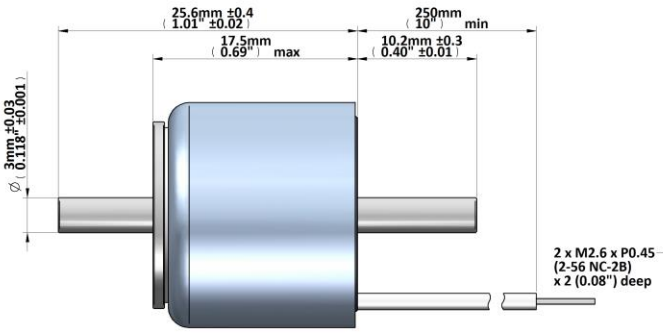

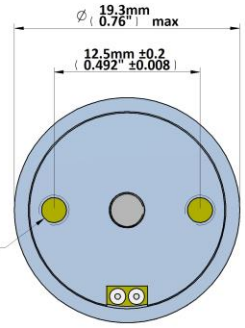

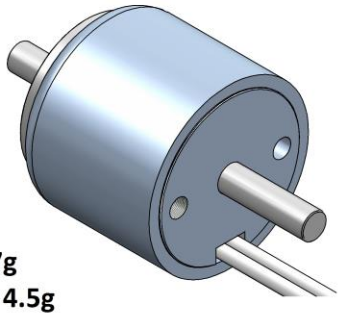

Mass 27g
Plunger 4.5g
Leadwires 28AWG, UL1430

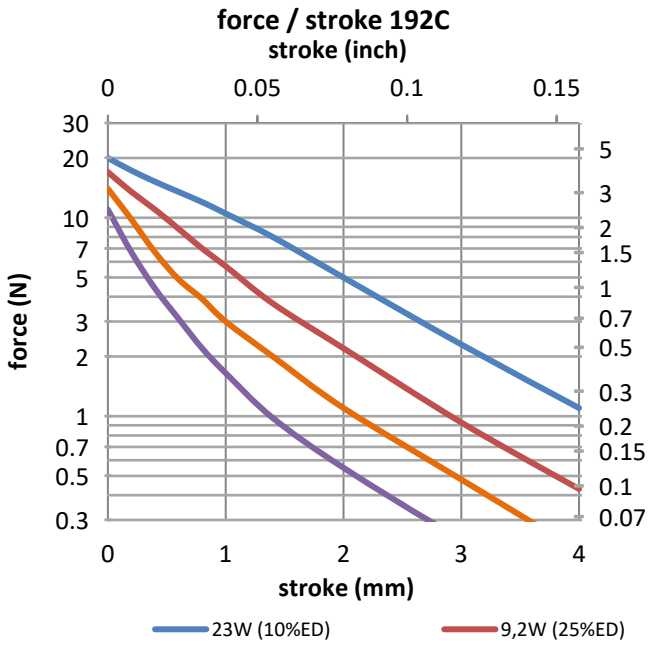

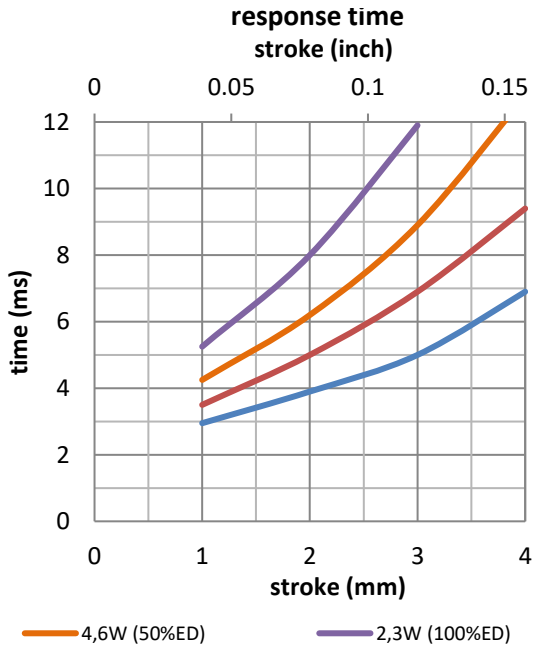

Data at 20°C , without heatsink

duty cycle = "on" time / "on" time + "off" time x 100%			100% cont.	50% or less	25% or less	10% or less
Max. "on" time in seconds			∞	100	36	7
watts at 20°C			2.3	4.6	9.2	23
ampere-turns at 20°			265	374	530	838
type no.	resistance Ω±10% (at 20°C)	number of turns	volts DC			
M192C-3V F192C-3V	4.3	380	3.0	4.2	6.0	9.5
M192C-6V F192C-6V	16	735	6.0	8.5	12	19
M192C-12V F192C-12V	68	1500	12	17	24	38
M192C-24V F192C-24V	242	2770	24	34	48	76

Insulation Resistance >100MΩ, 500VDC Megger
Dielectric Strength 1000VAC, 50/60Hz, 1 minute
Class E (120°C) insulation class

GEEPLUS Push Pull Solenoid size 194

Device drawn in energised condition
conical plunger
Life Expectancy (cycles): >5M

Available mechanical options:
M: metric thread
F: SAE thread

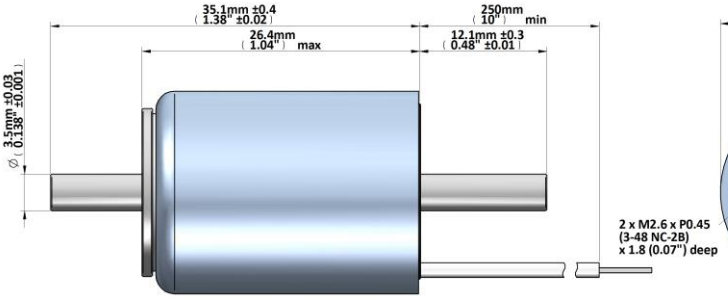

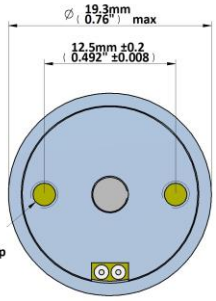

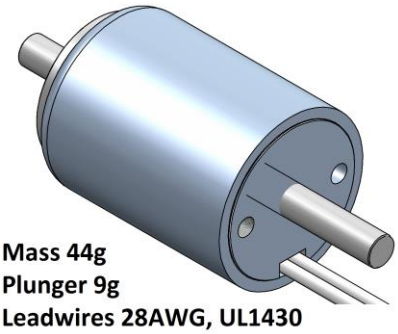

Mass 44g
Plunger 9g
Leadwires 28AWG, UL1430

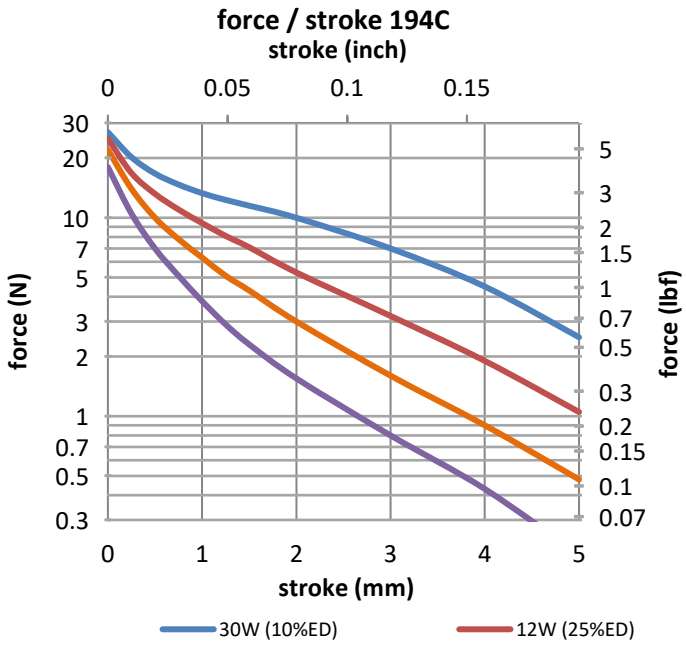

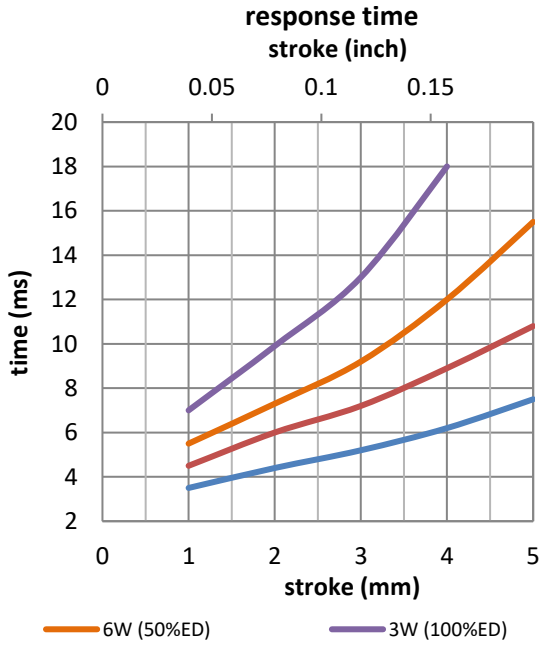

Data at 20°C , without heatsink

duty cycle = "on" time / "on" time + "off" time x 100%			100% cont.	50% or less	25% or less	10% or less
Max. "on" time in seconds			∞	100	36	7
watts at 20°C			3	6	12	30
ampere-turns at 20°			382	542	765	1211
type no.	**resistance Ω±10% (at 20°C)**	**number of turns**	**volts DC**			
M194C-3V F194C-3V	2.7	360	3.0	4.2	6.0	9.5
M194C-6V F194-6V	11.8	770	6.0	8.5	12	19
M194C-12V F194C-12V	49.5	1620	12	17	24	38
M194C-24V F194C-24V	185	2950	24	34	48	76

Insulation Resistance >100MΩ, 500VDC Megger
Class E (120°C) insulation class

Dielectric Strength 1000VAC, 50/60Hz, 1 minute

GEEPLUS Push Pull Solenoid size 221

Device drawn in energised condition
conical plunger
Life Expectancy (cycles): >5M

Available mechanical options:
M: metric thread
F: SAE thread

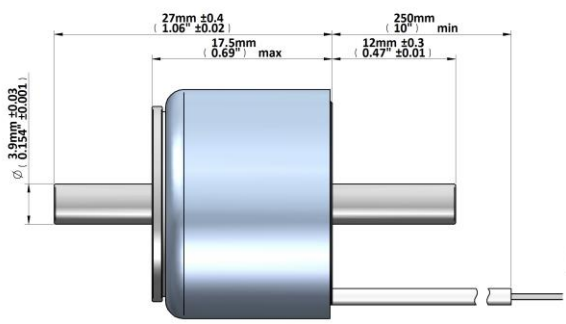

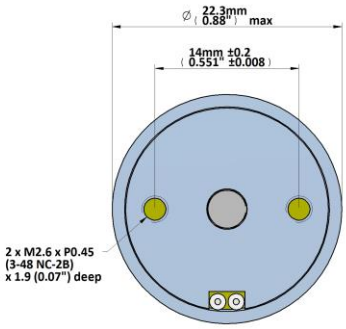

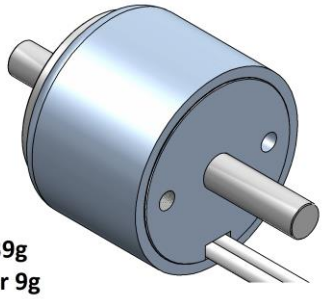

Mass 39g
Plunger 9g
Leadwires 26AWG, UL1430

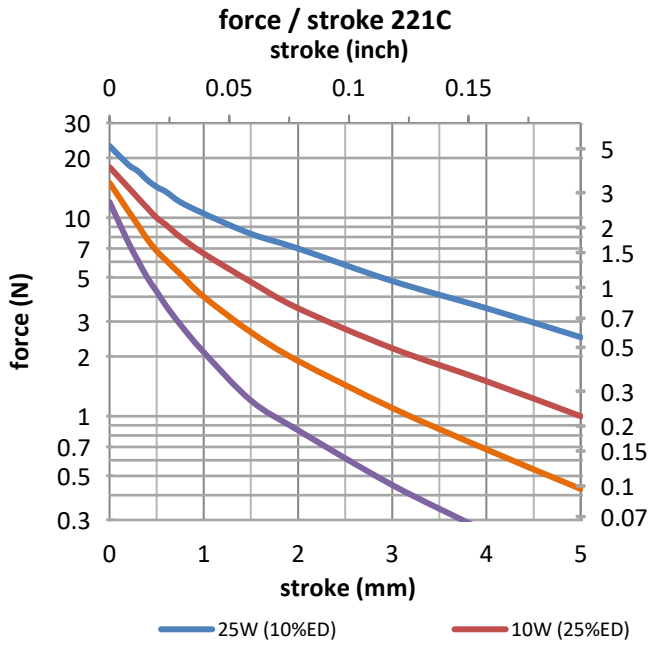

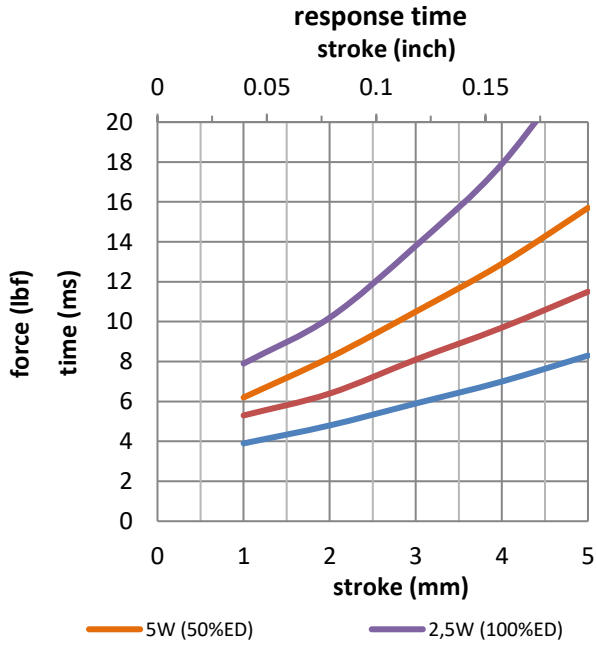

Data at 20°C , without heatsink

duty cycle = "on" time / ("on" time + "off" time) x 100%			100% cont.	50% or less	25% or less	10% or less
Max. "on" time in seconds			∞	100	36	7
watts at 20°C			2.5	5	10	25
ampere-turns at 20°			253	358	507	803
type no.	**resistance Ω±10% (at 20°C)**	**number of turns**	**volts DC**			
M221C-3V F221C-3V	3.8	325	3.0	4.2	6.0	9.5
M221C-6V F221C-6V	13.8	620	6.0	8.5	12	19
M221C-12V F221C-12V	59	1260	12	17	24	38
M221C-24V F221C-24V	226	2200	24	34	48	76

Insulation Resistance >100MΩ, 500VDC Megger
Dielectric Strength 1000VAC, 50/60Hz, 1 minute
Class E (120°C) insulation class

GEEPLUS Push Pull Solenoid size 224

Device drawn in energised condition
conical plunger
Life Expectancy (cycles): >5M

Available mechanical options:
M: metric thread
F: SAE thread

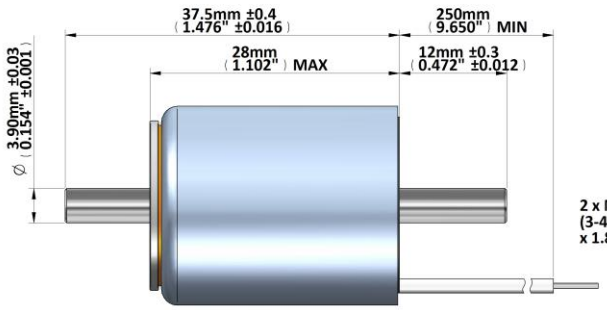

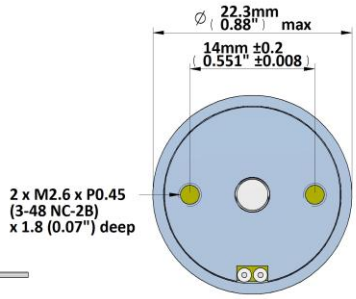

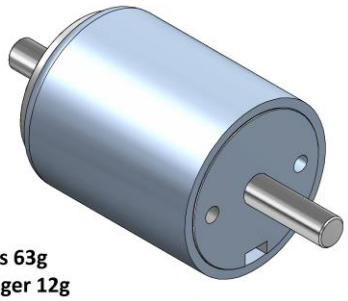

Mass 63g
Plunger 12g
Leadwires 26AWG, UL1430

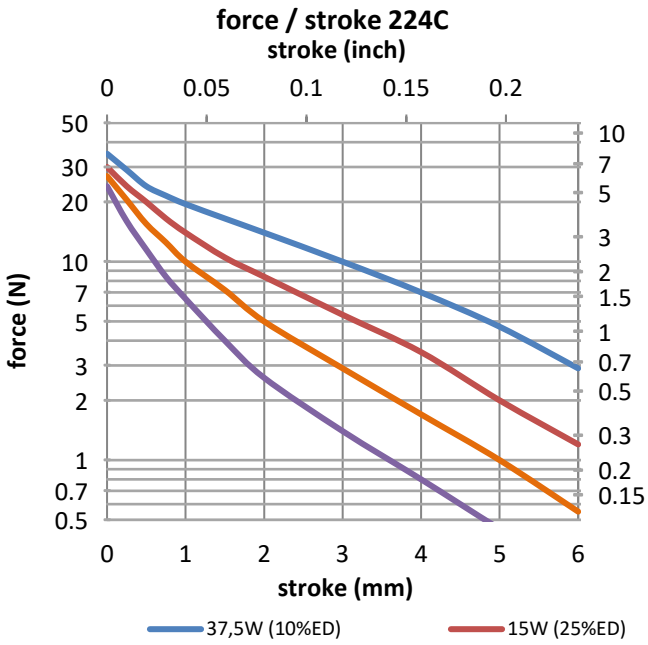

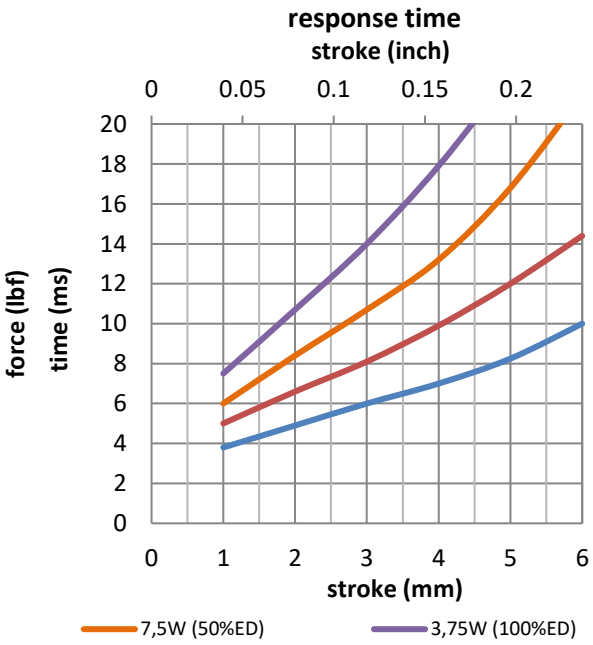

Data at 20°C , without heatsink

duty cycle = "on" time / "on" time + "off" time x 100%			100% cont.	50% or less	25% or less	10% or less
Max. "on" time in seconds			∞	100	36	7
watts at 20°C			3.75	7.5	15	37.5
ampere-turns at 20°			440	623	880	1393
type no.	resistance Ω±10% (at 20°C)	number of turns	volts DC			
M224C-3V F224C-3V	2.3	350	3.0	4.2	6.0	9.5
M224C-6V F224C-6V	10	750	6.0	8.5	12	19
M224C-12V F224C-12V	38	1460	12	17	24	38
M224C-24V F224C-24V	167	3060	24	34	48	76

Insulation Resistance >100MΩ, 500VDC Megger
Dielectric Strength 1000VAC, 50/60Hz, 1 minute
Class E (120°C) insulation class

GEEPLUS Push Pull Solenoid size 250

Device drawn in energised condition
plunger options: conical (250C) / flat (250F)
Life Expectancy (cycles): >2M (-P), >10M (-PE)

Available mechanical options:
M: metric thread
F: SAE thread

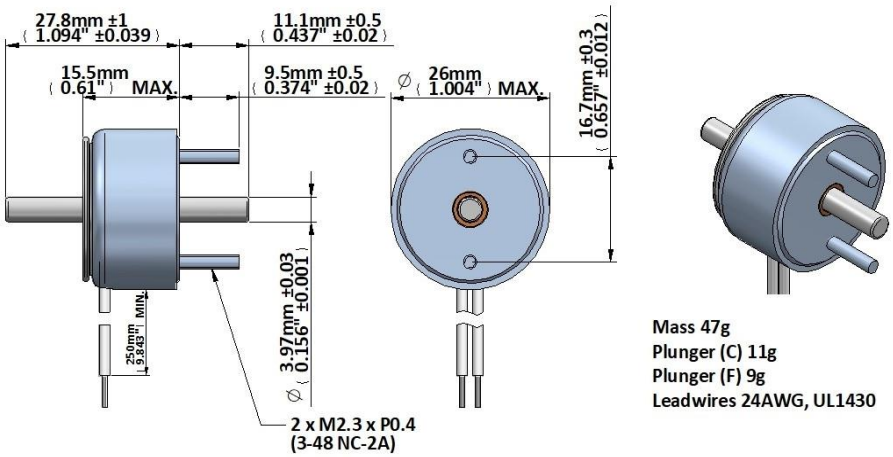

Mass 47g
Plunger (C) 11g
Plunger (F) 9g
Leadwires 24AWG, UL1430

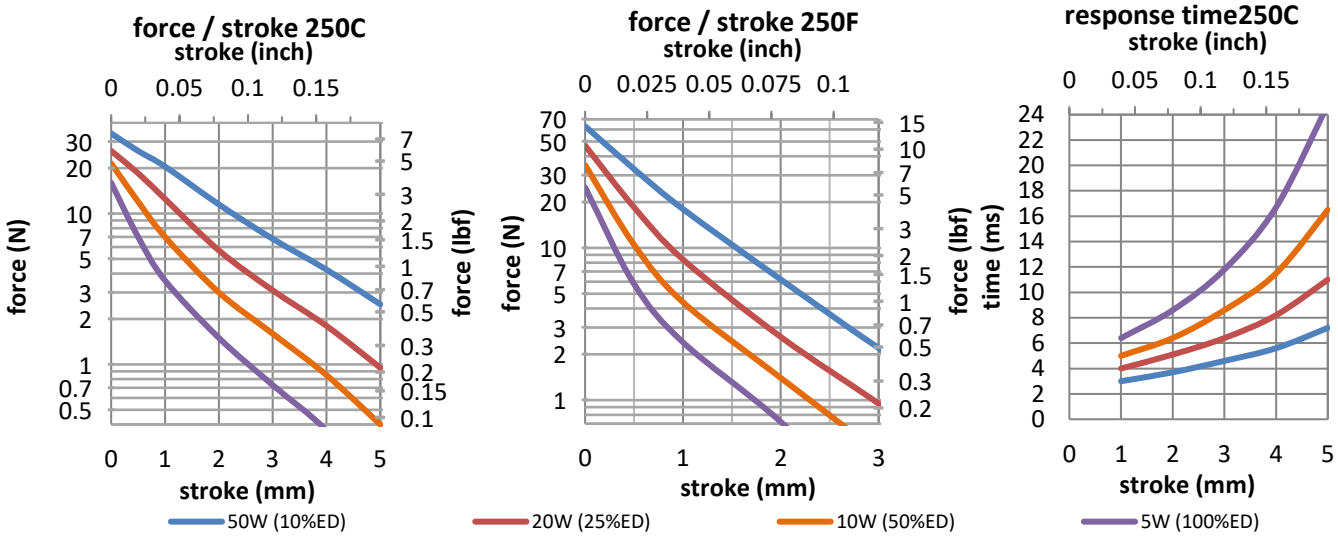

Data at 20°C , device connected to heatsink 80x80x3mm aluminum

duty cycle = "on" time / "on" time + "off" time x 100%			100% cont.	50% or less	25% or less	10% or less
Max. "on" time in seconds			∞	100	36	7
watts at 20°C			5	10	20	50
ampere-turns at 20°			340	480	680	1075
AWG no.	resistance Ω±10% (at 20°C)	number of turns	volts DC			
25	0.85	138	2.1	3.0	4.2	6.6
26	1.42	184	2.6	3.7	5.2	8.3
27	1.90	197	3.3	4.6	6.6	10.4
28	3.21	272	4.0	5.7	8.0	12.7
29	5.11	340	5.1	7.2	10.2	16.2
30	8.03	439	6.2	8.8	12.4	19.7
31	12.95	560	7.9	11.1	15.7	25
32	20.25	690	10.0	14.1	20	32
33	29.97	839	12.1	17.1	24	38
34	49.60	1097	15.4	22	31	49
35	82.64	1396	20	28	40	64
36	110	1551	24	34	48	76
37	157	1776	30	42	60	95
38	237	2180	37	52	74	117
39	426	3110	47	66	93	147
40	698	3802	62	88	125	197

Insulation Resistance >100MΩ, 500VDC Megger
Dielectric Strength 1000VAC, 50/60Hz, 1 minute
Class E (120°C) insulation class

GEEPLUS Push Pull Solenoid size 251

Device drawn in energised condition
conical plunger
Life Expectancy (cycles): >5M

Available mechanical options:
M: metric thread
F: SAE thread

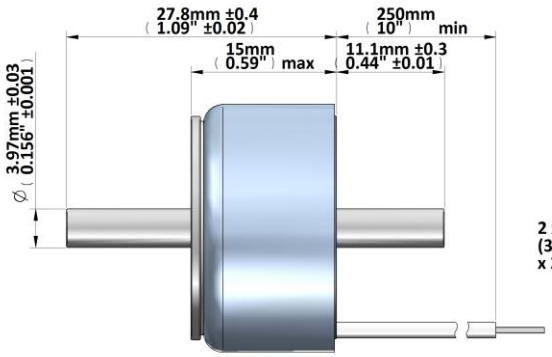

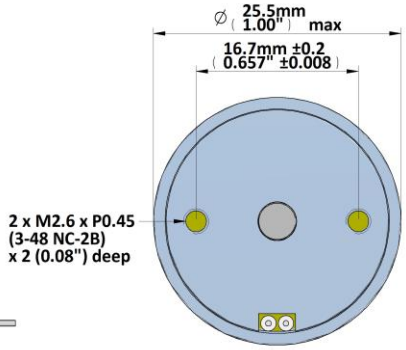

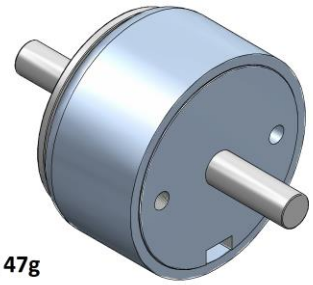

Mass 47g
Plunger 11g
Leadwires 24AWG, UL1430

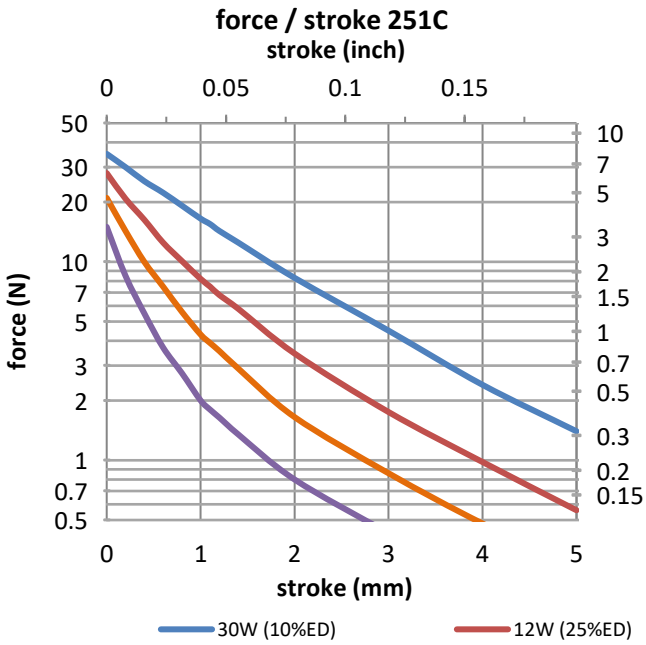

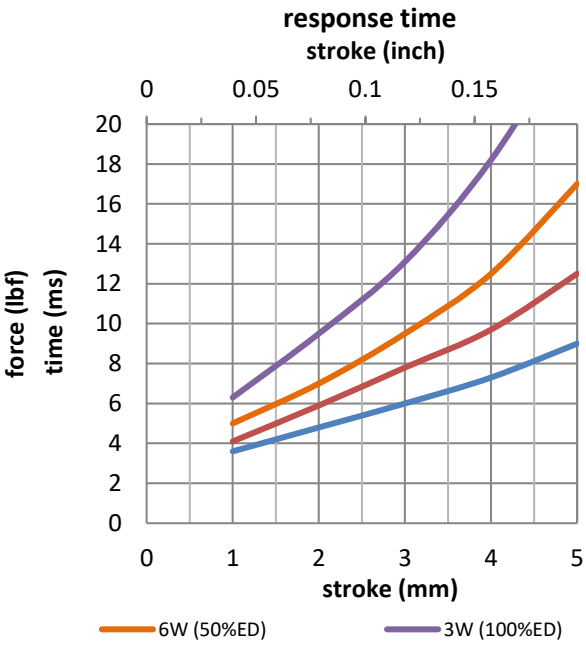

Data at 20°C , without heatsink

duty cycle = "on" time / ("on" time + "off" time) x 100%			100% cont.	50% or less	25% or less	10% or less
Max. "on" time in seconds			∞	100	36	7
watts at 20°C			3	6	12	30
ampere-turns at 20°			240	339	480	758
type no.	**resistance Ω±10% (at 20°C)**	**number of turns**	**volts DC**			
M251C-3V F251C-3V	3.3	285	3.0	4.2	6.0	9.5
M251C-6V F251C-6V	13	570	6.0	8.5	12	19
M251C-12V F251C-12V	51	1090	12	17	24	38
M251C-24V F251C-24V	228	2250	24	34	48	76

Insulation Resistance >100MΩ, 500VDC Megger
Dielectric Strength 1000VAC, 50/60Hz, 1 minute
Class E (120°C) insulation class

GEEPLUS Push Pull Solenoid size 300

Device drawn in energised condition
conical plunger
Life Expectancy (cycles): >5M

Available mechanical options:
M: metric thread
F: SAE thread

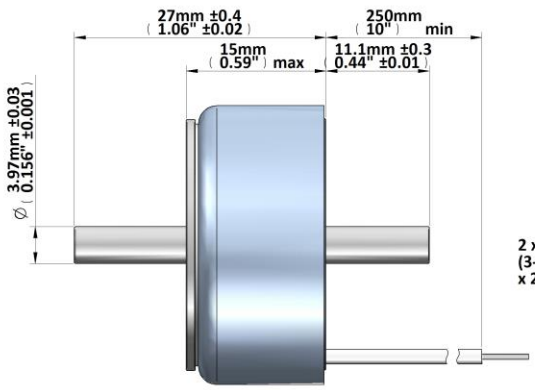

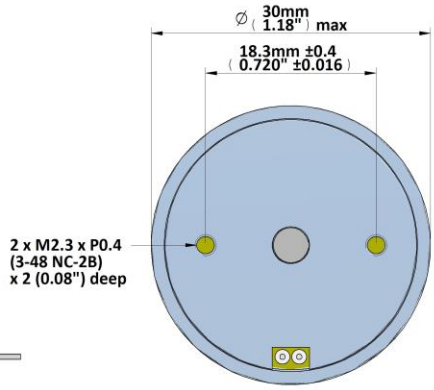

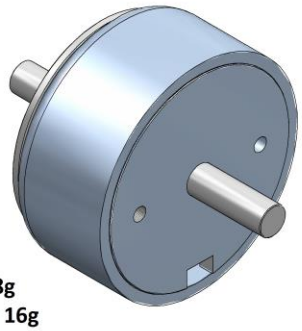

Mass 58g
Plunger 16g
Leadwires 28AWG, UL1430

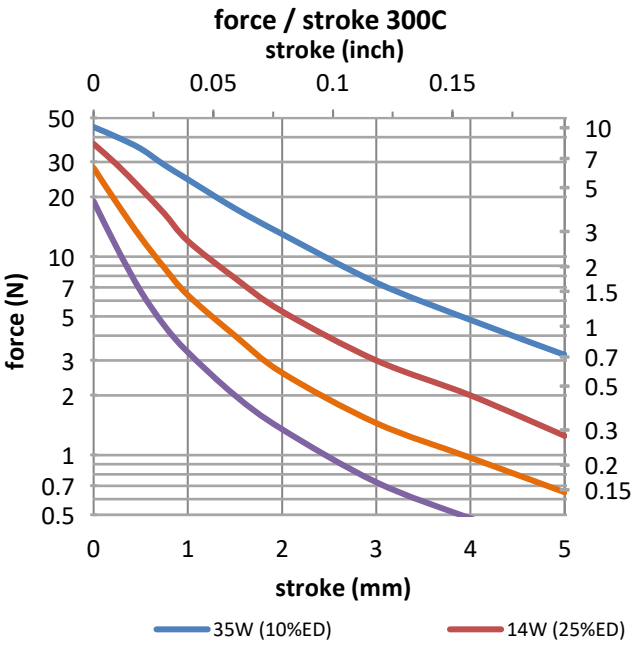

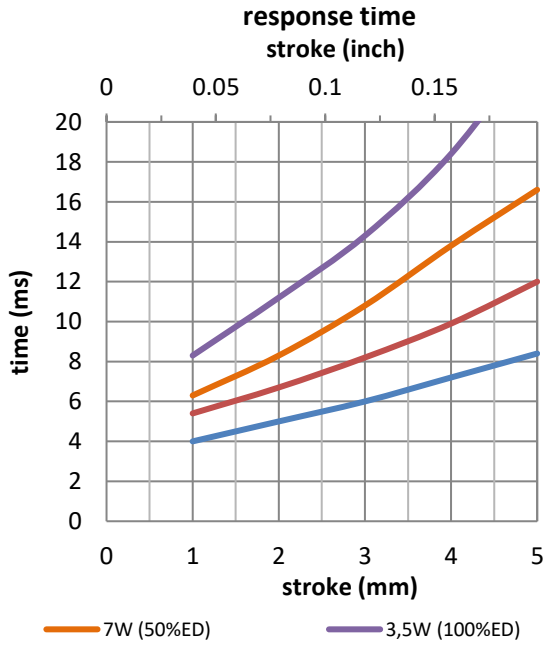

Data at 20°C , without heatsink

duty cycle = "on" time / ("on" time + "off" time) x 100%			100% cont.	50% or less	25% or less	10% or less
Max. "on" time in seconds			∞	100	36	7
watts at 20°C			3.5	7	14	35
ampere-turns at 20°			272	385	545	864
type no.	**resistance Ω±10% (at 20°C)**	**number of turns**	**volts DC**			
M300C-3V F300C-3V	2.6	235	3.0	4.2	6.0	9.5
M300C-6V F300C-6V	10.4	485	6.0	8.5	12	19
M300C-12V F300C-12V	41.8	990	12	17	24	38
M300C-24V F300C-24V	166	1780	24	34	48	76

Insulation Resistance >100MΩ, 500VDC Megger
Dielectric Strength 1000VAC, 50/60Hz, 1 minute
Class E (120°C) insulation class

GEEPLUS Push Pull Solenoid size 301

Device drawn in energised condition
plunger options: conical (301C) / flat (301F)
Life Expectancy (cycles): >2M (-P), >10M (-PE)

Available mechanical options:
M: metric thread
F: SAE thread

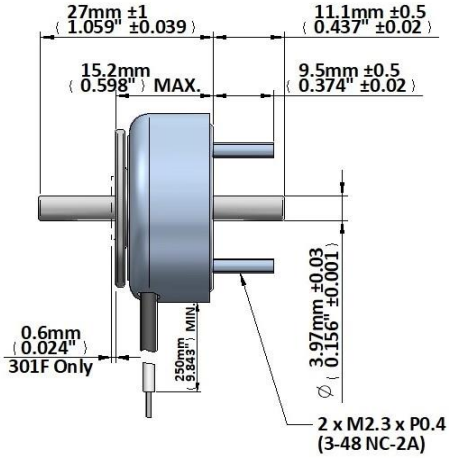

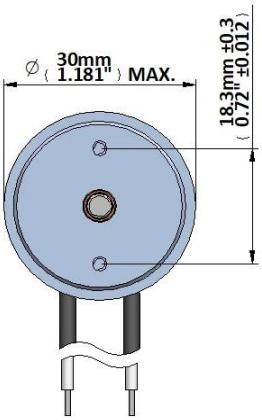

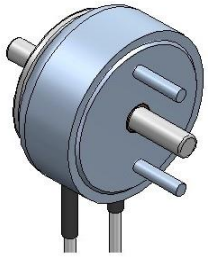

Mass 56g
Plunger (C) 16g
Plunger (F) 14g
Leadwires 24AWG, UL1430

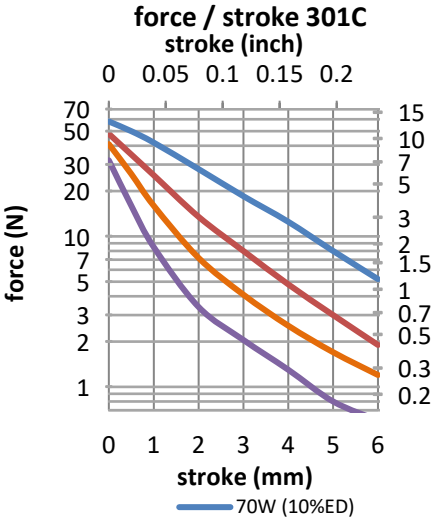

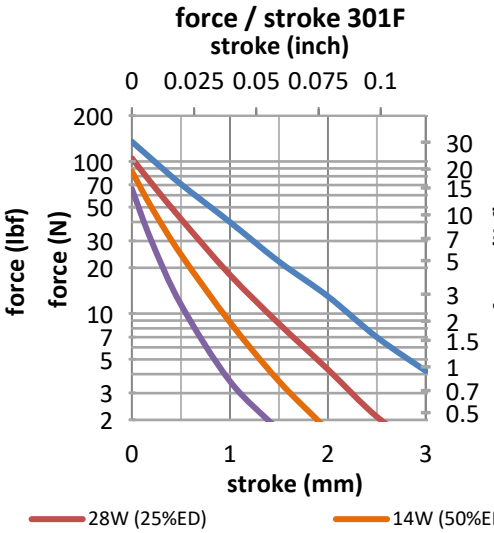

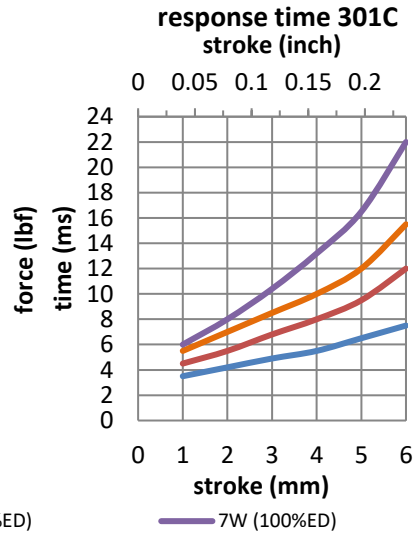

Data at 20°C , device connected to heatsink 90x90x3mm aluminum

duty cycle = "on" time / ("on" time + "off" time) x 100%			100% cont.	50% or less	25% or less	10% or less
Max. "on" time in seconds			∞	100	36	7
watts at 20°C			7	14	28	70
ampere-turns at 20°			425	602	849	1350
AWG no.	resistance Ω±10% (at 20°C)	number of turns	volts DC			
26	1.96	231	3.5	5.0	7.1	11
27	3.16	296	4.5	6.3	8.9	14
28	5.10	378	5.6	8.0	11	18
29	6.94	423	7.1	10	14	22
30	11.0	530	8.9	13	18	28
31	16.9	649	11	16	22	36
32	28.3	858	14	20	28	45
33	42.8	1036	18	25	35	56
34	69.6	1312	22	32	45	71
35	112	1674	28	39	56	89
36	148	1765	35	50	71	112
37	221	2090	45	63	89	142
38	352	2650	56	80	112	178
39	568	3380	71	100	141	224
40	882	4200	89	126	178	283

Insulation Resistance >100MΩ, 500VDC Megger
Dielectric Strength 1000VAC, 50/60Hz, 1 minute
Class E (120°C) insulation class

GEEPLUS Push Pull Solenoid size 304

Device drawn in energised condition
conical plunger
Life Expectancy (cycles): >5M

Available mechanical options:
M: metric thread
F: SAE thread

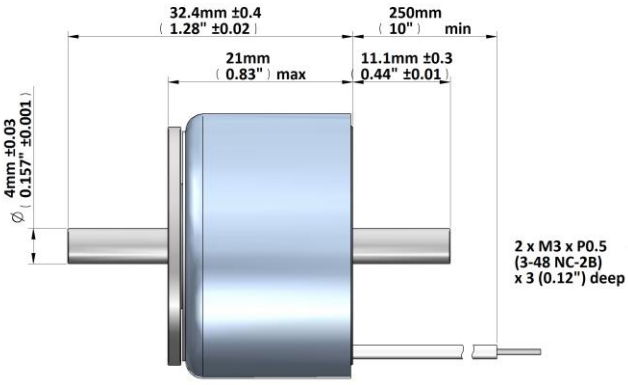

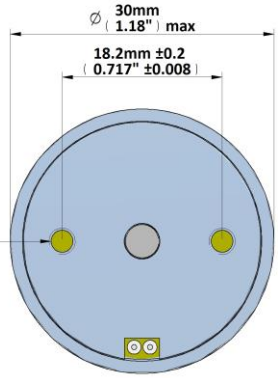

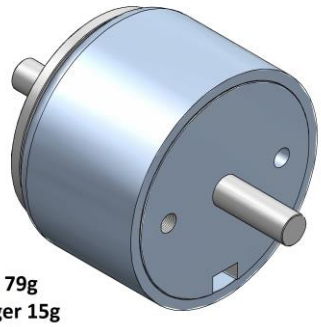

Mass 79g
Plunger 15g
Leadwires 24AWG, UL1430

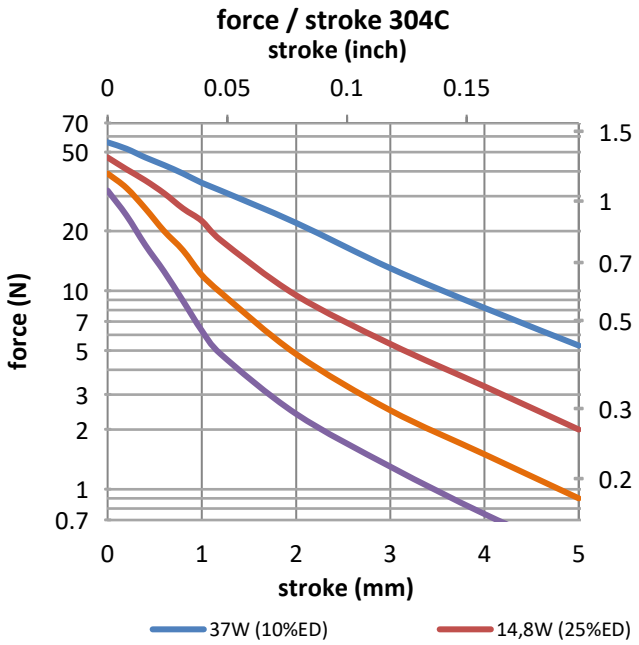

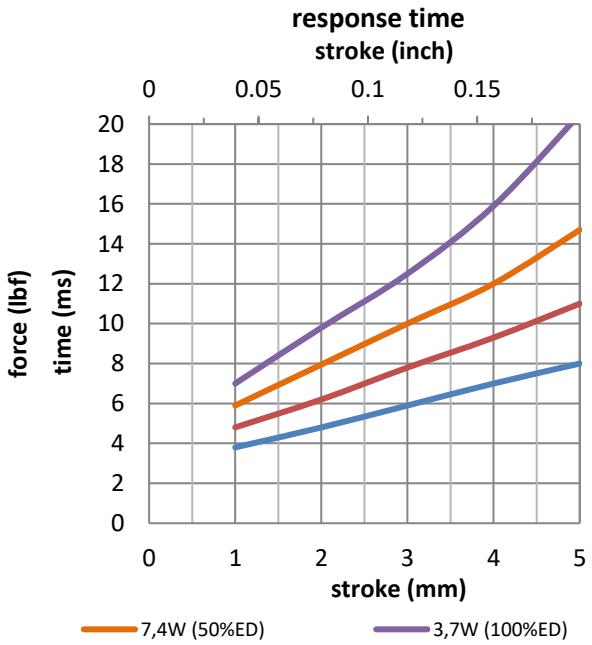

Data at 20°C , without heatsink

duty cycle = "on" time / "on" time + "off" time x 100%			100% cont.	50% or less	25% or less	10% or less
Max. "on" time in seconds			∞	100	36	7
watts at 20°C			3.7	7.4	14.8	37
ampere-turns at 20°			320	452	640	1012
type no.	**resistance Ω±10% (at 20°C)**	**number of turns**	**volts DC**			
M304C-3V F304C-3V	3.15	320	3.0	4.2	6.0	9.5
M304C-6V F304C-6V	10.7	575	6.0	8.5	12	19
M304C-12V F304C-12V	43	1150	12	17	24	38
M304C-24V F304C-24V	150	2140	24	34	48	76

Insulation Resistance >100MΩ, 500VDC Megger
Dielectric Strength 1000VAC, 50/60Hz, 1 minute
Class E (120°C) insulation class

GEEPLUS Push Pull Solenoid size 341

Device drawn in energised condition
plunger options: conical (341C) / flat (341F)
Life Expectancy (cycles): >2M (-P), >10M (-PE)

Available mechanical options:
M: metric thread
F: SAE thread

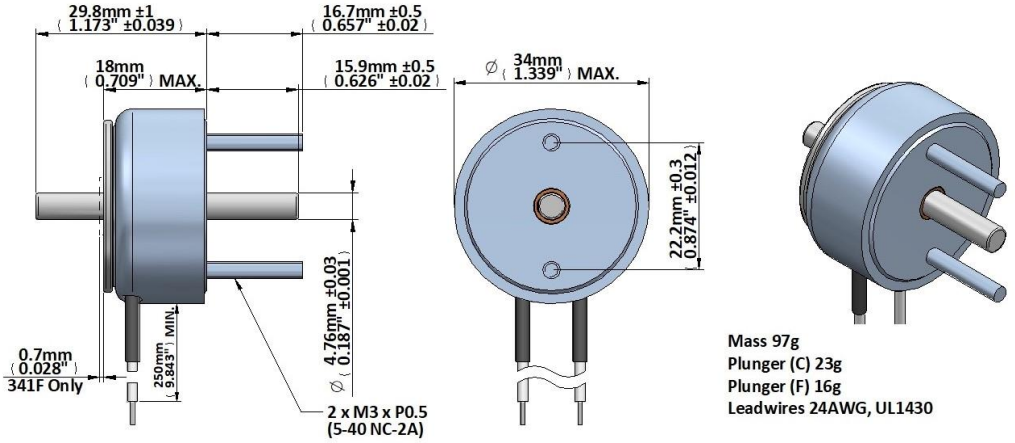

Mass 97g
Plunger (C) 23g
Plunger (F) 16g
Leadwires 24AWG, UL1430

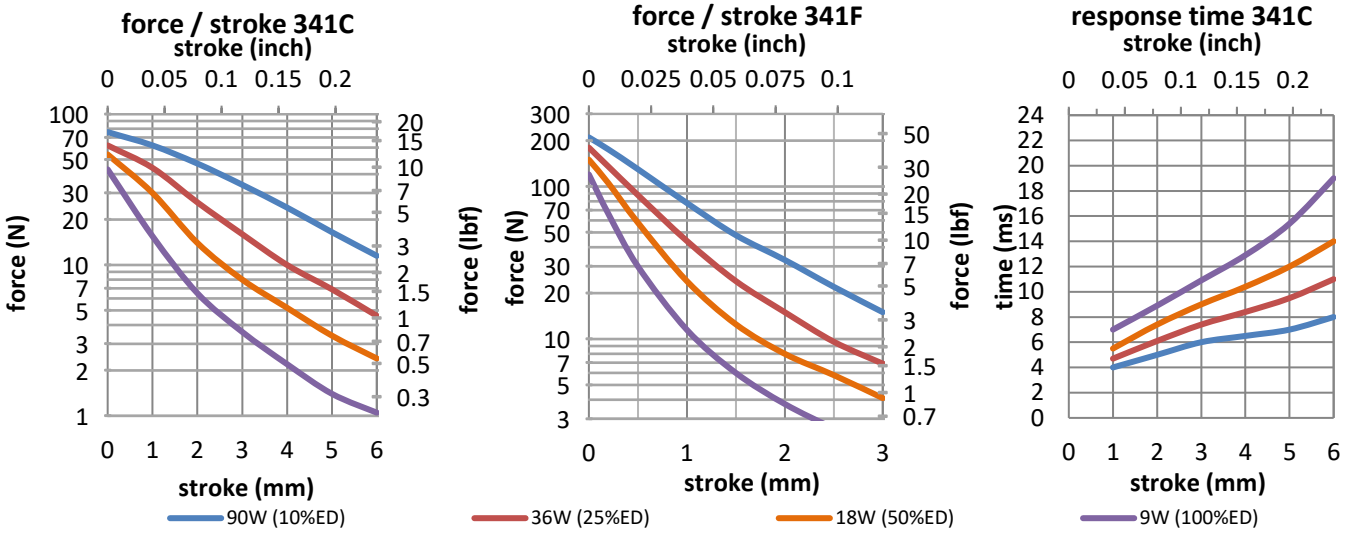

Data at 20°C , device connected to heatsink 120x120x3mm aluminum

duty cycle = "on" time / ("on" time + "off" time) x 100%			100% cont.	50% or less	25% or less	10% or less
Max. "on" time in seconds			∞	100	36	8
watts at 20°C			9	18	36	90
ampere-turns at 20°			535	756	1070	1690
AWG no.	resistance Ω±10% (at 20°C)	number of turns	volts DC			
25	1.97	252	4.2	5.9	8.4	13
26	3.26	328	5.3	7.5	11	17
27	5.04	405	6.7	9.4	13	21
28	8.02	510	8.4	12	17	26
29	12.2	627	10	15	21	33
30	19.2	780	13	19	26	42
31	31.8	1008	17	24	33	53
32	47.0	1215	21	30	42	66
33	75.3	1530	26	37	53	84
34	120.5	1900	33	47	67	105
35	198	2486	42	59	84	133
36	280	2700	53	75	106	167
37	426	3350	67	94	133	210
38	648	4050	84	118	168	264
39	1020	5050	105	149	211	333
40	1667	6590	133	187	265	419

Insulation Resistance >100MΩ, 500VDC Megger
Class E (120°C) insulation class

Dielectric Strength 1000VAC, 50/60Hz, 1 minute

GEEPLUS Push Pull Solenoid size 401

Device drawn in energised condition
plunger options: conical (401C) / flat (401F)
Life Expectancy (cycles): >2M (-P), >10M (-PE)

Available mechanical options:
M: metric thread
F: SAE thread

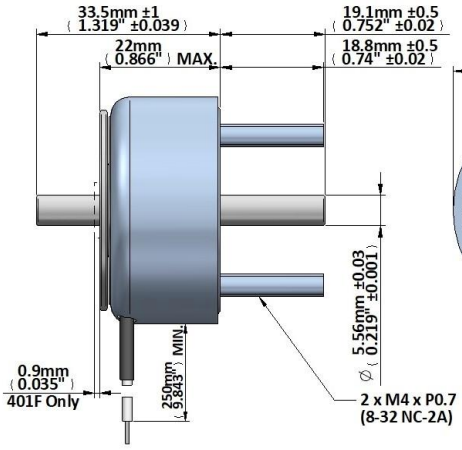

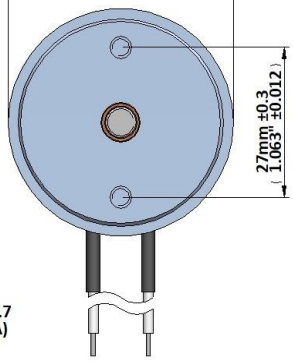

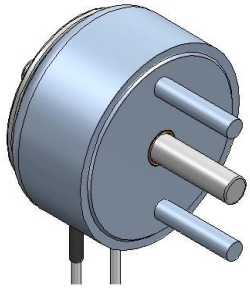

Mass 200g
Plunger (C) 40g
Plunger (F) 34g
Leadwires 22AWG, UL1430

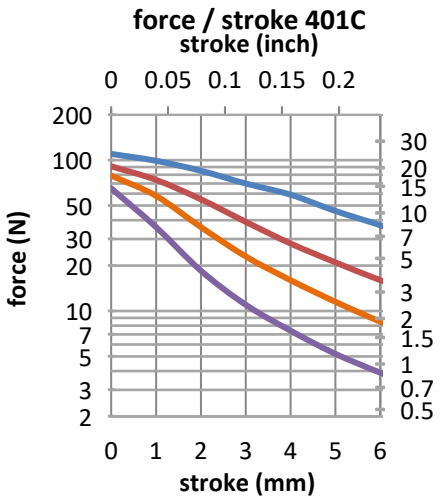

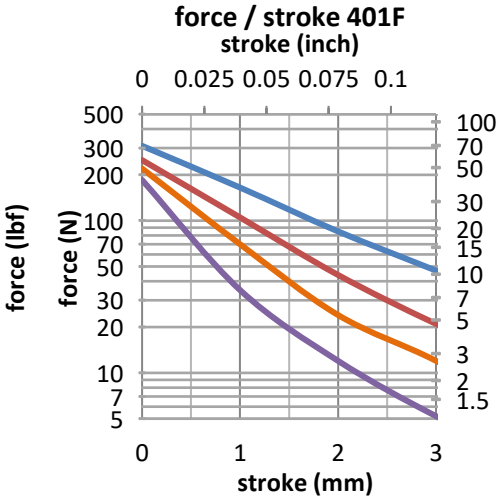

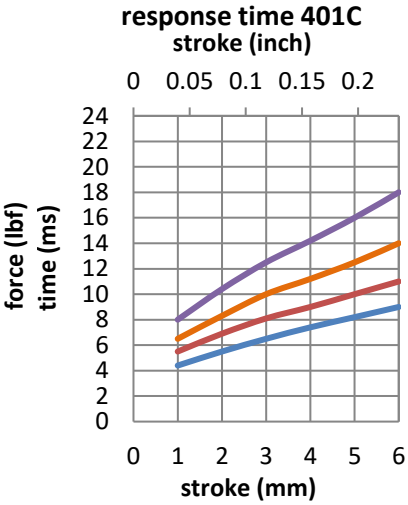

125W (10%ED) 50W (25%ED) 25W (50%ED) 12,5W (100%ED)

Data at 20°C , device connected to heatsink 160x160x3mm aluminum

duty cycle = "on" time / ("on" time + "off" time) x 100%			100% cont.	50% or less	25% or less	10% or less
Max. "on" time in seconds			∞	100	36	9
watts at 20°C			12.5	25	50	125
ampere-turns at 20°			714	1000	1425	2250
AWG no.	resistance Ω±10% (at 20°C)	number of turns	volts DC			
25	3.50	384	6.6	9.5	13	21
26	5.67	486	8.4	12	17	27
27	8.76	600	11	16	22	35
28	13.8	748	13	18	26	42
29	22.6	975	17	23	33	52
30	34.8	1190	21	30	42	67
31	56.7	1520	27	38	54	85
32	88.3	1908	35	49	70	110
33	138	2360	43	60	86	138
34	216	2904	53	75	106	168
35	351	3725	67	95	132	213
36	480	4000	85	119	169	268
37	720	4950	105	147	210	332
38	1150	6200	132	185	264	-
39	1920	8350	166	232	332	-
40	3000	10000	210	300	-	-

Insulation Resistance >100MΩ, 500VDC Megger
Class E (120°C) insulation class

Dielectric Strength 1000VAC, 50/60Hz, 1 minute

GEEPLUS Push Pull Solenoid size 490

Device drawn in energised condition
plunger options: flat (490F)
Life Expectancy (cycles): >2M (-P), >10M (-PE)

Available mechanical options:
M: metric thread
F: SAE thread

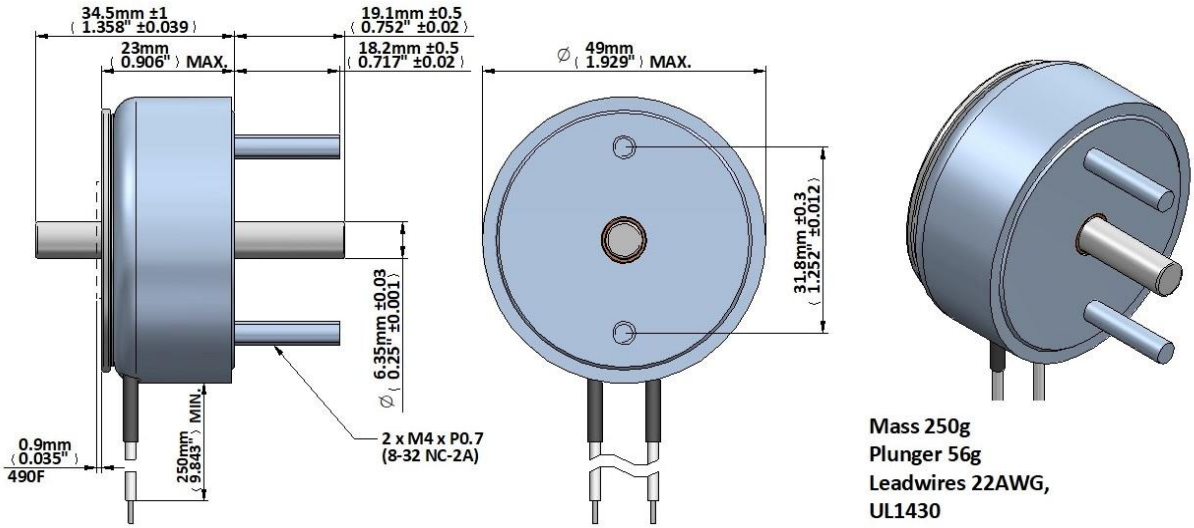

Mass 250g
Plunger 56g
Leadwires 22AWG, UL1430

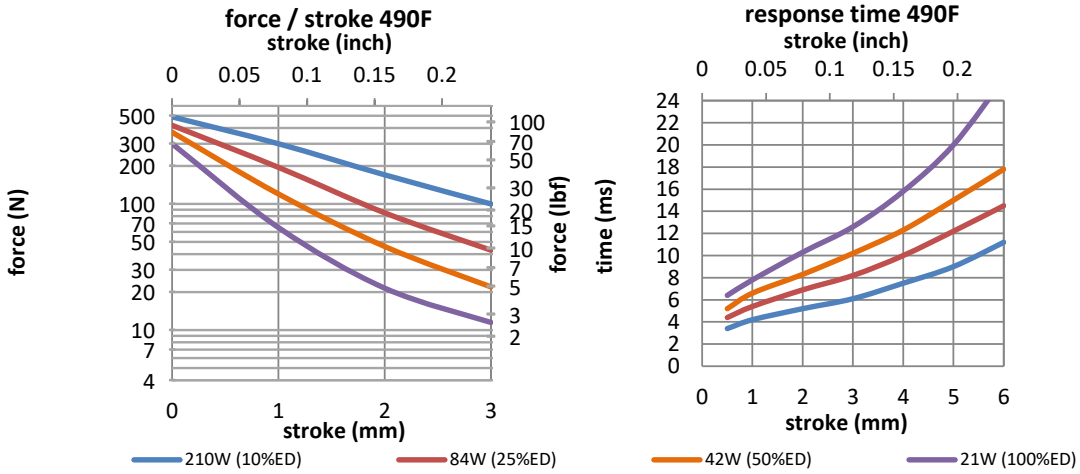

Data at 20°C , device connected to heatsink 190x190x3mm aluminum

duty cycle = "on" time / ("on" time + "off" time) x 100%			100% cont.	50% or less	25% or less	10% or less
Max. "on" time in seconds			∞	100	36	10
watts at 20°C			21	42	84	210
ampere-turns at 20°			842	1190	1685	2660
AWG no.	resistance Ω±10% (at 20°C)	number of turns	volts DC			
24	3.20	360	7.6	11	15	24
25	4.91	440	9.5	13	19	30
26	7.72	550	12	17	24	38
27	11.1	636	15	21	30	48
28	18.8	840	19	27	38	60
29	30.5	1088	24	34	48	76
30	44.9	1275	30	43	60	95
31	70.9	1596	38	54	76	120
32	109	1974	48	67	95	150
33	175	2496	60	85	120	190
34	270	3042	76	107	151	239
35	414	3600	95	134	190	301
36	610	4200	122	173	245	386
37	940	5200	151	213	301	-
38	1560	6820	190	268	379	-

Insulation Resistance >100MΩ, 500VDC Megger

Dielectric Strength 1000VAC, 50/60Hz, 1 minute

Class E (120°C) insulation class

GEEPLUS Push Pull Solenoid size 491

Device drawn in energised condition
plunger options: conical (491C) / flat (491F)
Life Expectancy (cycles): >2M (-P), >10M (-PE)

Available mechanical options:
M: metric thread
F: SAE thread

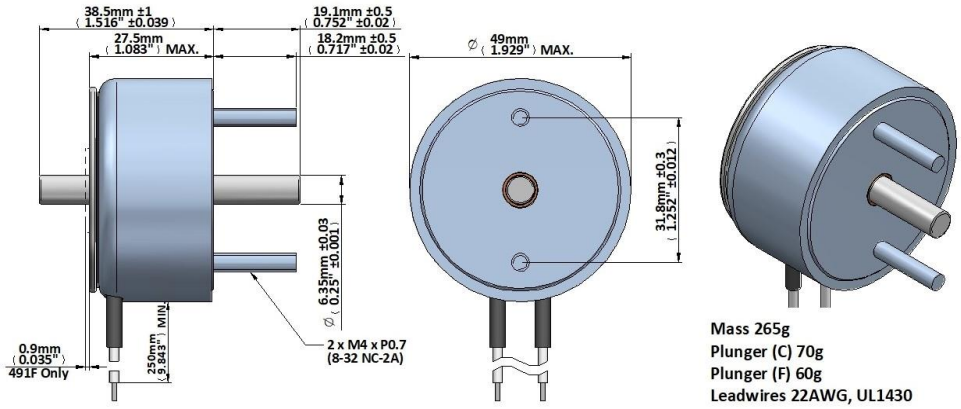

Mass 265g
Plunger (C) 70g
Plunger (F) 60g
Leadwires 22AWG, UL1430

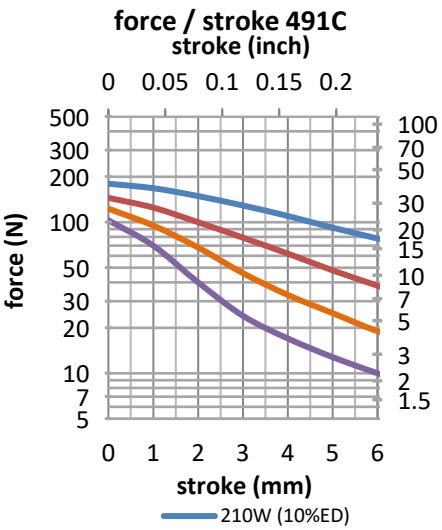

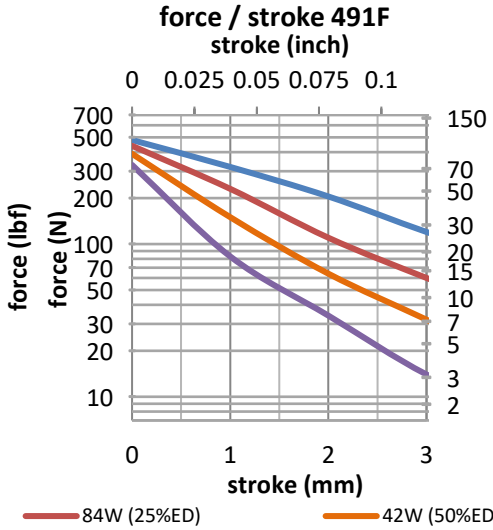

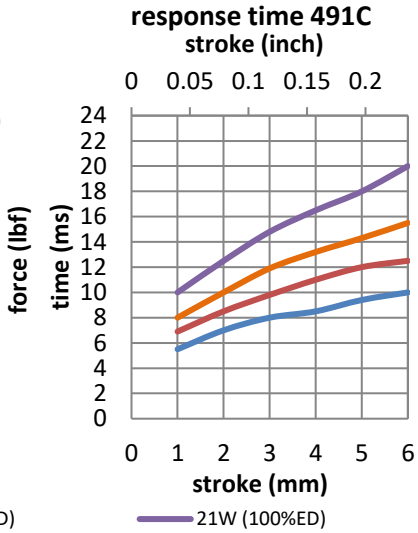

Data at 20°C , device connected to heatsink 190x190x3mm aluminum

duty cycle = "on" time / ("on" time + "off" time) x 100%			100% cont.	50% or less	25% or less	10% or less
Max. "on" time in seconds			∞	100	36	10
watts at 20°C			21	42	84	210
ampere-turns at 20°			1015	1440	2030	3210
AWG no.	resistance Ω±10% (at 20°C)	number of turns	volts DC			
21	1.00	228	4.5	6.4	8.9	14.1
22	1.68	301	5.7	8.1	11.4	17.9
23	2.70	384	7.2	10.1	14.3	23
24	4.30	486	9.0	12.7	18	28
25	6.66	590	11.5	16.2	23	36
26	10.3	737	14.0	20	28	44
27	15.7	900	17.7	25	35	56
28	26.6	1190	23	32	45	72
29	38.0	1380	28	40	56	89
30	62.1	1768	36	51	71	113
31	96.1	2166	45	64	90	143
32	157	2816	57	80	113	179
33	241	3432	71	101	143	226
34	364	4108	90	128	180	285
35	566	4920	117	166	234	370
36	910	6340	146	207	392	462
37	1224	6800	183	260	366	-

Insulation Resistance >100MΩ, 500VDC Megger
Dielectric Strength 1000VAC, 50/60Hz, 1 minute
Class E (120°C) insulation class

GEEPLUS Push Pull Solenoid size 590

Device drawn in energised condition
plunger options: conical (590C) / flat (590F)
Life Expectancy (cycles): >2M (-P), >10M (-PE)

Available mechanical options:
M: metric thread
F: SAE thread

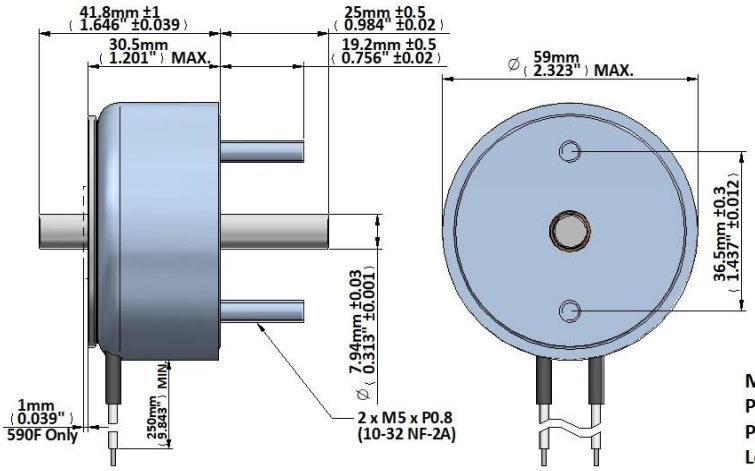

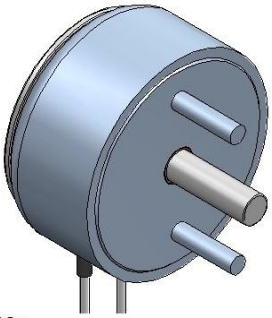

Mass 506g
Plunger (C) 120g
Plunger (F) 95g
Leadwires 20AWG, UL1430

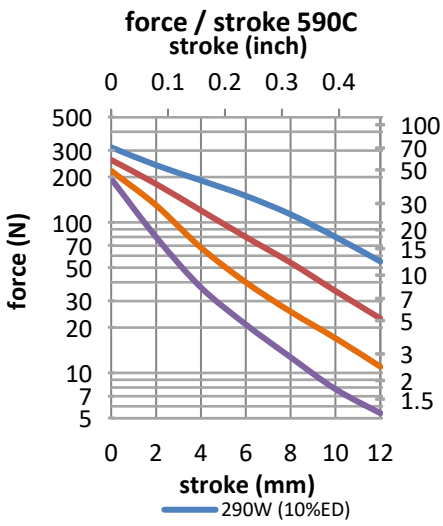

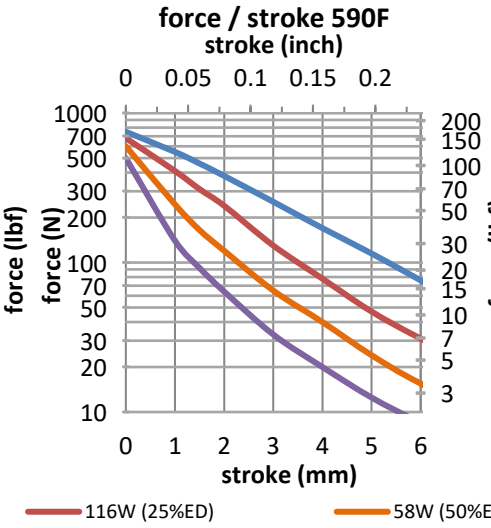

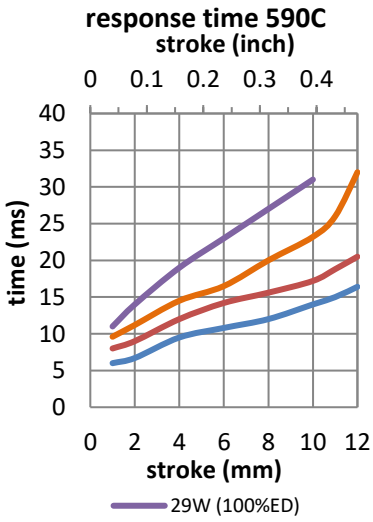

Data at 20°C , device connected to heatsink 310x310x3mm aluminum

duty cycle = "on" time / ("on" time + "off" time) x 100%			100% cont.	50% or less	25% or less	10% or less
Max. "on" time in seconds			∞	87	36	13
watts at 20°C			29	58	116	290
ampere-turns at 20°			1240	1760	2490	3920
AWG no.	resistance Ω±10% (at 20°C)	number of turns	volts DC			
22	2.23	336	8.3	12	16	26
23	3.60	432	10	15	21	33
24	5.24	500	13	18	26	41
25	9.51	708	16	23	33	52
26	14.4	858	21	29	41	66
27	23.7	1110	26	37	52	83
28	38.2	1411	33	47	66	104
29	54.7	1638	41	59	83	131
30	93.7	2184	52	74	104	165
31	143	2645	66	93	131	207
32	223	3328	83	117	165	261
33	338	4004	104	147	208	329
34	550	5088	131	185	262	-
35	790	5860	165	233	330	-
36	1233	7260	208	294	-	-

Insulation Resistance >100MΩ, 500VDC Megger
Class E (120°C) insulation class

Dielectric Strength 1000VAC, 50/60Hz, 1 minute

GEEPLUS Push Pull Solenoid size 591

Device drawn in energised condition
plunger options: conical (591C) / flat (591F)
Life Expectancy (cycles): >2M (-P), >10M (-PE)

Available mechanical options:
M: metric thread
F: SAE thread

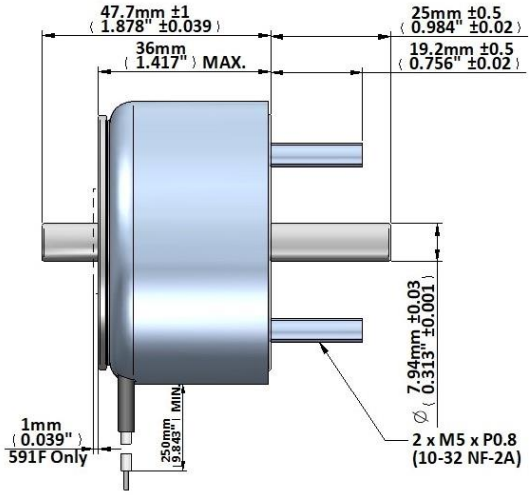

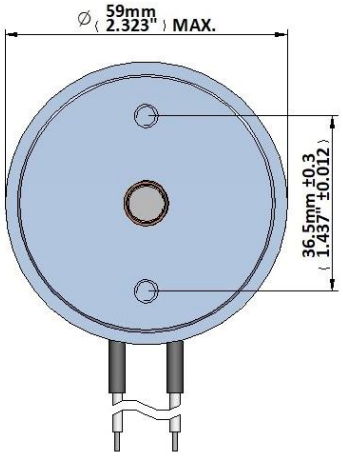

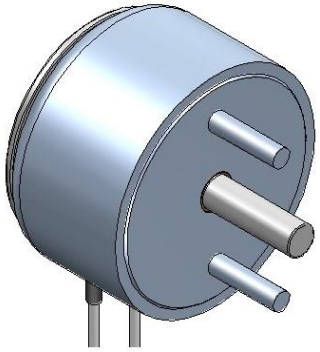

Mass 620g
Plunger (C) 145g
Plunger (F) 140g
Leadwires 20AWG, UL1430

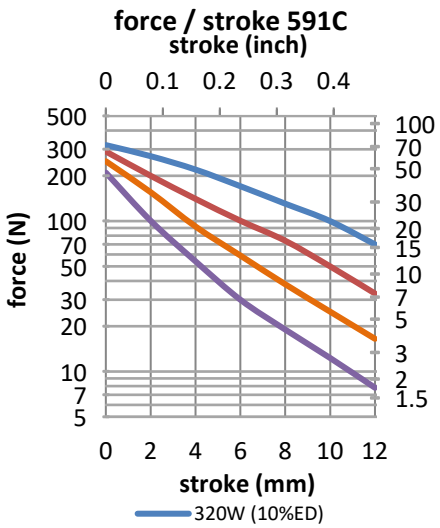

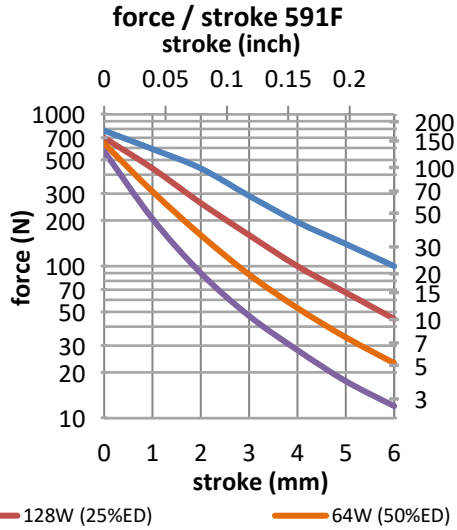

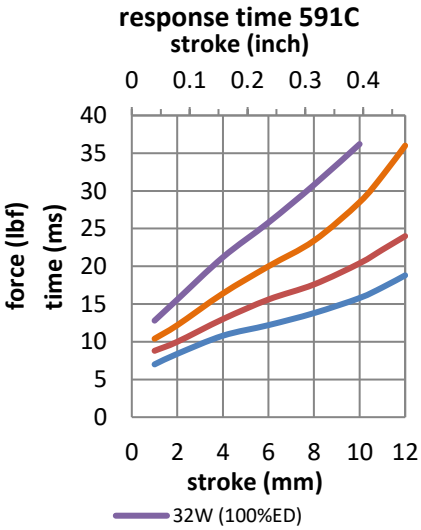

320W (10%ED) 128W (25%ED) 64W (50%ED) 32W (100%ED)

Data at 20°C , device connected to heatsink 310x310x3mm aluminum

duty cycle = "on" time / ("on" time + "off" time) x 100%			100% cont.	50% or less	25% or less	10% or less
Max. "on" time in seconds			∞	87	36	13
watts at 20°C			32	64	128	320
ampere-turns at 20°			1480	2080	2940	4620
AWG no.	resistance Ω±10% (at 20°C)	number of turns	volts DC			
20	1.23	295	6.2	8.7	12.3	19.3
21	1.75	340	7.6	10.7	15.1	24
22	2.79	446	9.3	13.0	18.4	29
23	4.54	567	11.9	16.7	24	37
24	6.93	690	14.9	21	30	46
25	12.5	910	20	29	40	63
26	18.4	1120	24	34	48	76
27	33.4	1500	33	46	65	103
28	46.3	1750	39	55	78	122
29	74.5	2232	49	69	98	154
30	125.5	2940	63	89	126	197
31	199	3611	82	115	162	255
32	302	4350	103	144	204	321
33	417	5010	123	173	245	385

Insulation Resistance >100MΩ, 500VDC Megger
Class E (120°C) insulation class

Dielectric Strength 1000VAC, 50/60Hz, 1 minute

GEEPLUS Push Pull Solenoid size 700

Device drawn in energised condition
plunger options: conical (700C) / flat (700F)
Life Expectancy (cycles): >2M (-P), >10M (-PE)

Available mechanical options:
M: metric thread
F: SAE thread

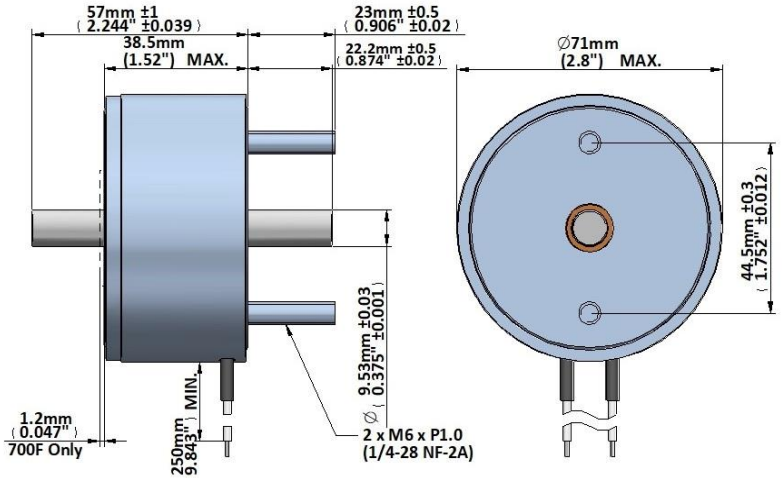

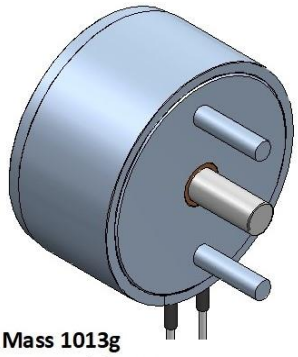

Mass 1013g
Plunger (C) 268g
Plunger (F) 285g
Leadwires 20AWG, UL1430

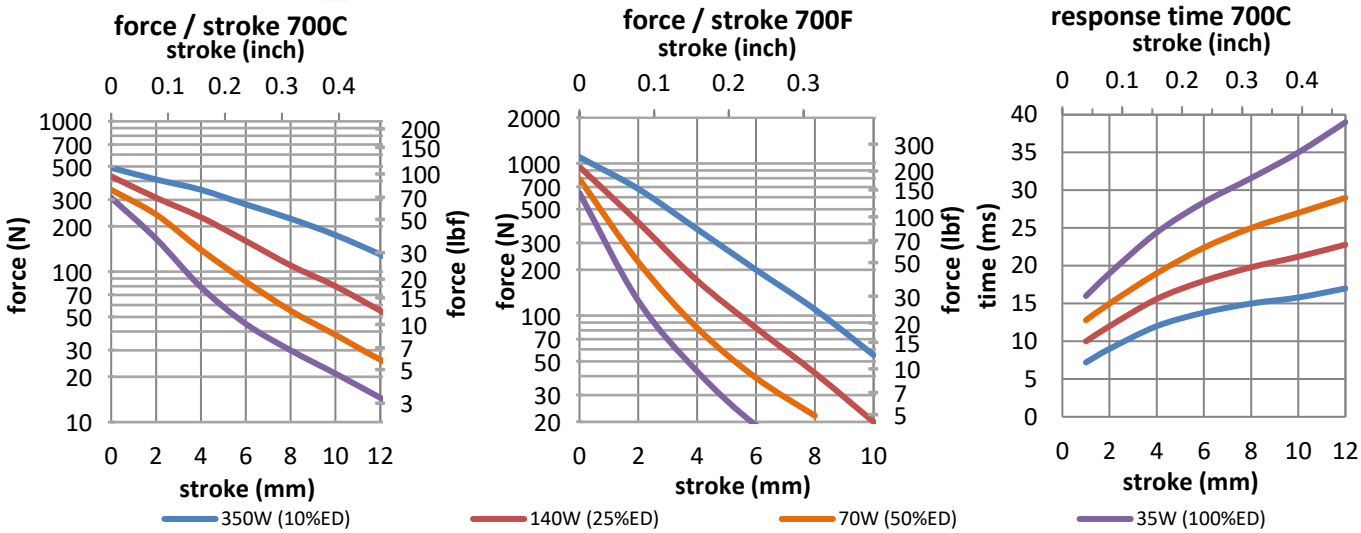

Data at 20°C , device connected to heatsink 390x390x3mm aluminum

duty cycle = "on" time / ("on" time + "off" time) x 100%			100% cont.	50% or less	25% or less	10% or less
Max. "on" time in seconds			∞	80	38	16
watts at 20°C			35	70	140	350
ampere-turns at 20°			1570	2230	3150	5000
AWG no.	**resistance Ω±10% (at 20°C)**	**number of turns**	**volts DC**			
20	1.88	368	8	11	16	26
21	3.01	468	10	14	20	32
22	4.82	580	13	18	26	41
23	8.1	780	16	23	33	52
24	12.3	949	20	29	41	65
25	19.0	1148	26	37	52	83
26	30.8	1472	33	46	66	105
27	48.8	1854	41	59	83	132
28	81.1	2436	52	75	105	166
29	121	2944	64	92	130	206
30	190	3650	82	118	166	264
31	275	4175	104	147	209	331
32	440	5792	119	170	240	-
33	735	7000	165	235	331	-
34	995	7600	204	288	-	-

Insulation Resistance >100MΩ, 500VDC Megger
Class E (120°C) insulation class

Dielectric Strength 1000VAC, 50/60Hz, 1 minute

GEEPLUS Push Pull Solenoid size 870

Device drawn in energised condition
plunger options: conical (870C) / flat (870F)
Life Expectancy (cycles): >2M (-P), >10M (-PE)

Available mechanical options:
M: metric thread
F: SAE thread

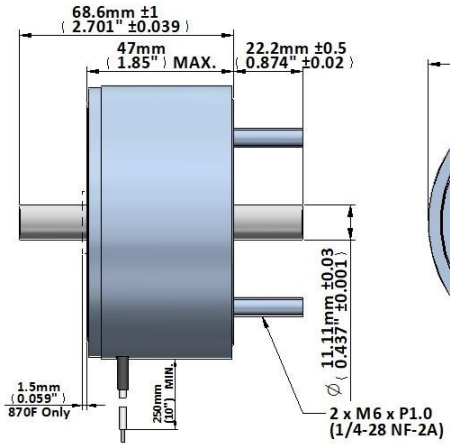

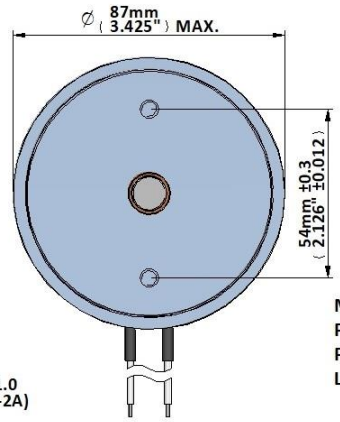

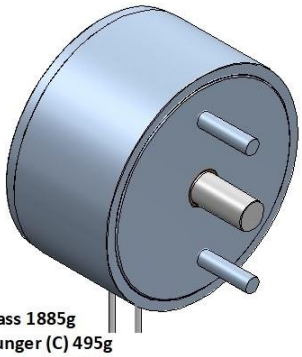

Mass 1885g
Plunger (C) 495g
Plunger (F) 480g
Leadwires 18AWG, UL1430

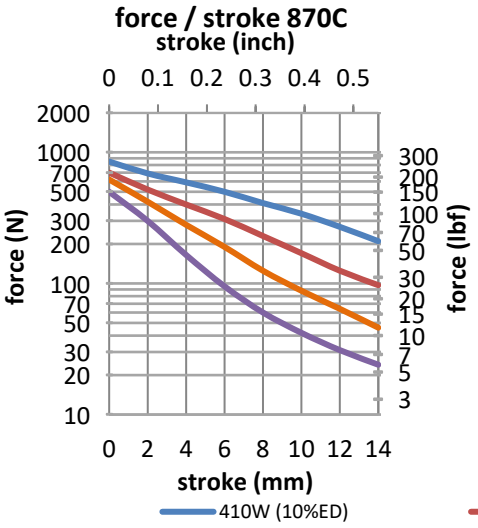

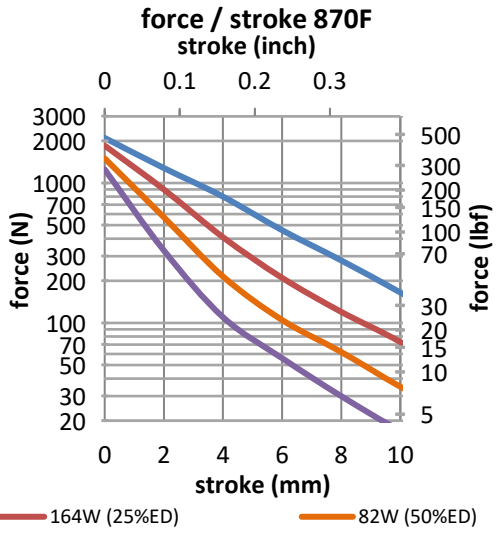

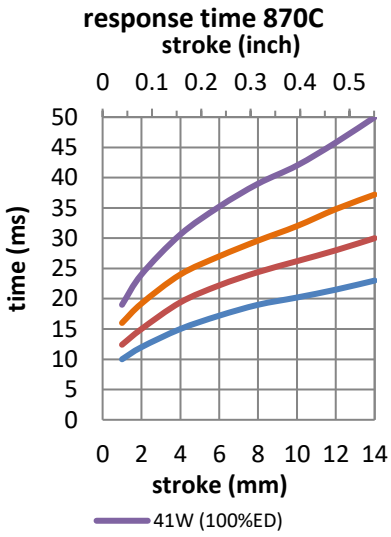

410W (10%ED) 164W (25%ED) 82W (50%ED) 41W (100%ED)

Data at 20°C , device connected to heatsink 520x520x3mm aluminum

duty cycle = "on" time / ("on" time + "off" time) x 100%			100% cont.	50% or less	25% or less	10% or less
Max. "on" time in seconds			∞	72	43	20
watts at 20°C			41	82	164	410
ampere-turns at 20°			1910	2750	3810	5950
AWG no.	resistance Ω±10% (at 20°C)	number of turns	volts DC			
18	1.47	368	7.6	11	15	24
19	2.30	459	9.6	14	19	30
20	3.64	580	12	17	24	37
21	5.57	704	15	22	30	47
22	9.50	936	19	28	39	60
23	14.3	1134	24	35	48	75
24	23.3	1456	30	44	61	95
25	37.1	1836	39	56	77	120
26	58.6	2300	49	70	97	152
27	89.8	2816	61	88	121	189
28	139	3456	76	111	153	239
29	227	4480	98	138	193	300
30	376	5792	124	177	248	387
31	515	6600	148	212	297	-
32	785	7850	188	275	385	-
33	1130	9050	237	339	-	-

Insulation Resistance >100MΩ, 500VDC Megger
Class E (120°C) insulation class

Dielectric Strength 1000VAC, 50/60Hz, 1 minute

GEEPLUS Push Pull Solenoid size 874

Device drawn in energised condition
plunger options: conical (874C) / flat (874F)
Life Expectancy (cycles): >2M (-P), >10M (-PE)

Available mechanical options:
M: metric thread
F: SAE thread

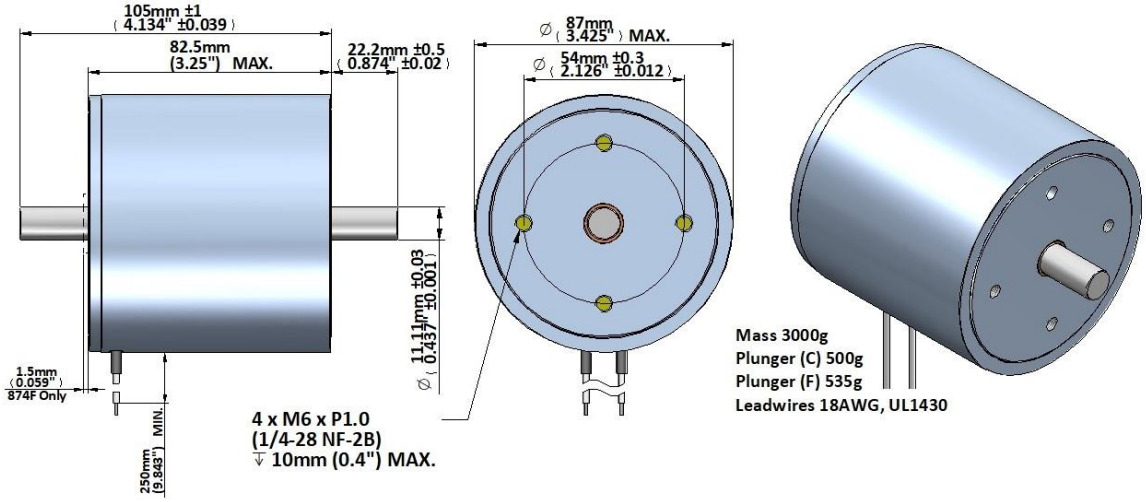

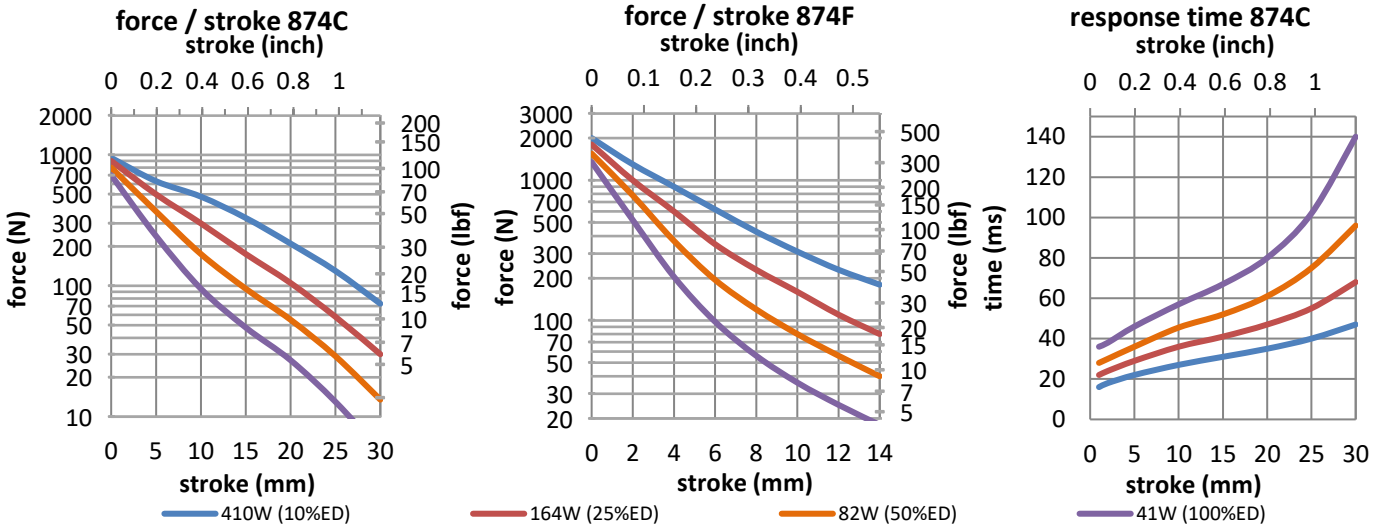

Data at 20°C , device connected to heatsink 520x520x3mm aluminum

duty cycle = "on" time / ("on" time + "off" time) x 100%			100% cont.	50% or less	25% or less	10% or less
Max. "on" time in seconds			∞	72	43	20
watts at 20°C			41	82	164	410
ampere-turns at 20°			2590	3663	5180	8190
AWG no.	resistance Ω±10% (at 20°C)	number of turns	volts DC			
18	2.54	630	10	15	21	33
19	4.15	828	13	18	26	41
20	6.38	1047	16	22	32	50
21	11.14	1408	20	29	41	65
22	16.8	1723	25	36	51	80
23	25.8	2046	33	46	65	103
24	42.5	2711	41	57	81	128
25	66.3	3279	52	74	105	166
26	105	4151	66	93	131	207
27	165	5190	82	116	165	260
28	261	6500	104	147	208	329
29	422	8340	131	185	262	-
30	664	10230	168	238	336	-
31	968	12410	202	286	-	-
32	1520	15200	259	366	-	-

Insulation Resistance >100MΩ, 500VDC Megger
Dielectric Strength 1000VAC, 50/60Hz, 1 minute
Class E (120°C) insulation class